Synthetic Fuels

Old Technology Reborn for a Sustainable Future

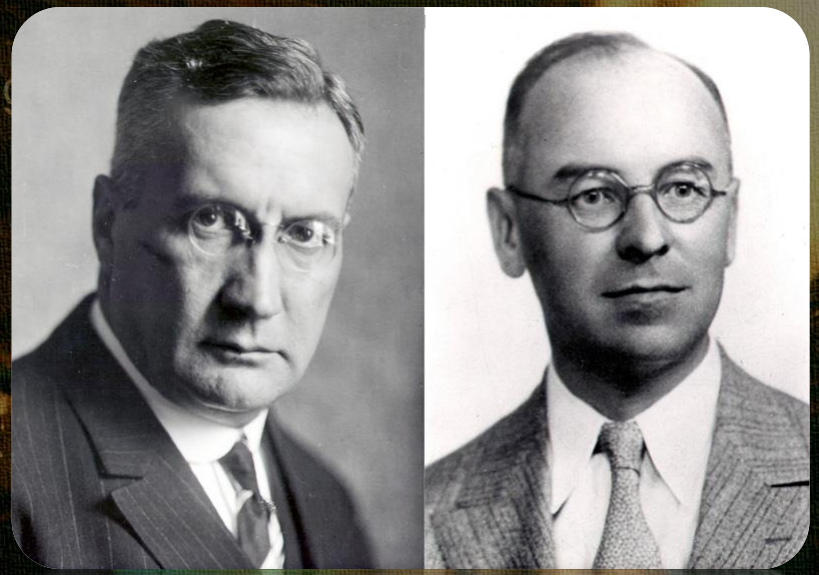

Franz Fischer

Hans Tropsch

Thomas A. Adams II
McMaster University
Department of Chemical Engineering
McMaster Advanced Control Consortium
McMaster Institute for Energy Studies

Lecture 5.3 – 2018 Edition

1. COAL LIQUEFACTION

Early stage processes

Direct Liquefaction of Coal

Defunct Kohleoel process
Commercial Scale in Germany until end of WWII

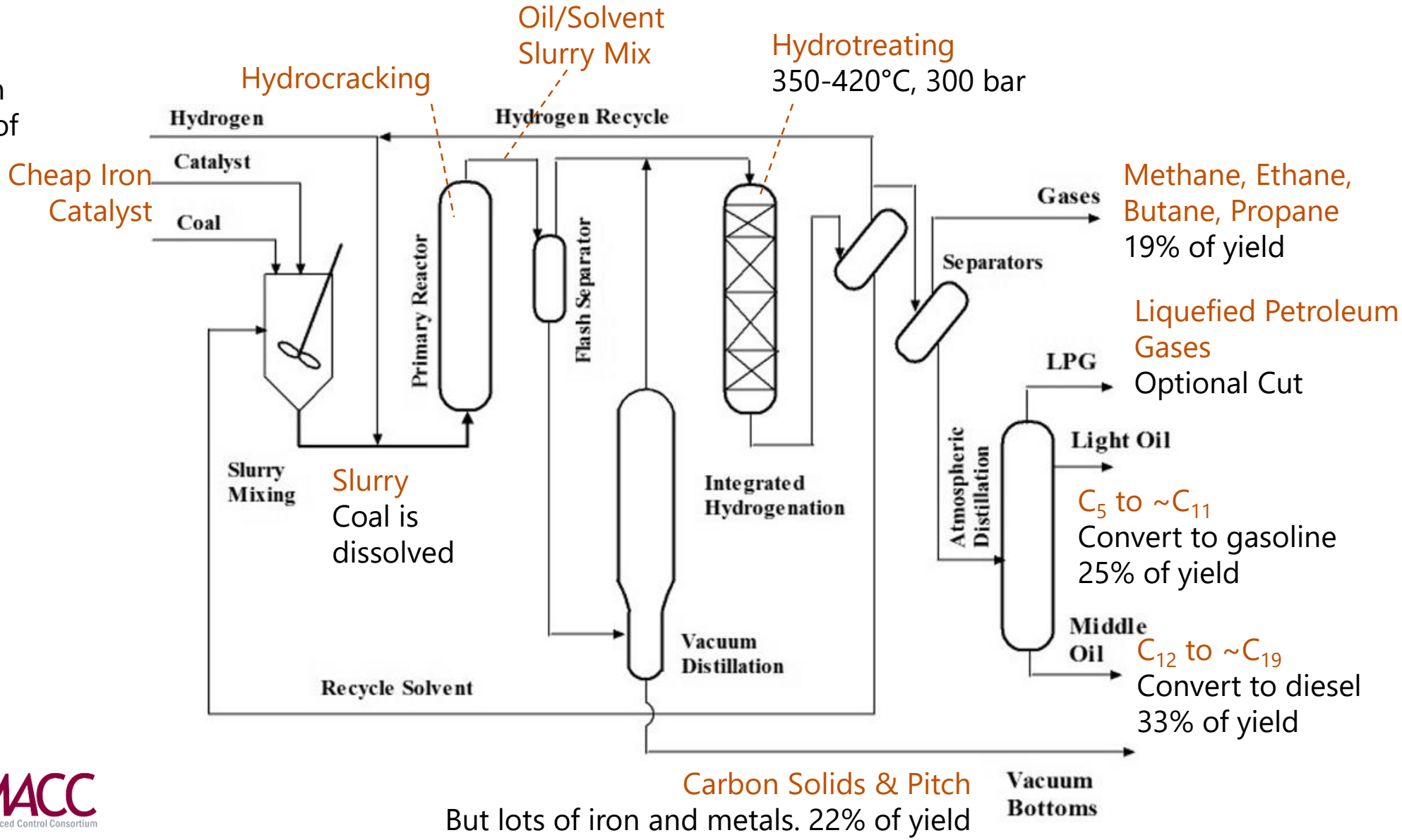

Sources: Ghosh 2009 – Ch 6.

McMaster University ENGINEERING
MACC McMaster Advanced Control Consortium

Coal Pyrolysis

Defunct Encol process

Used lower value coals

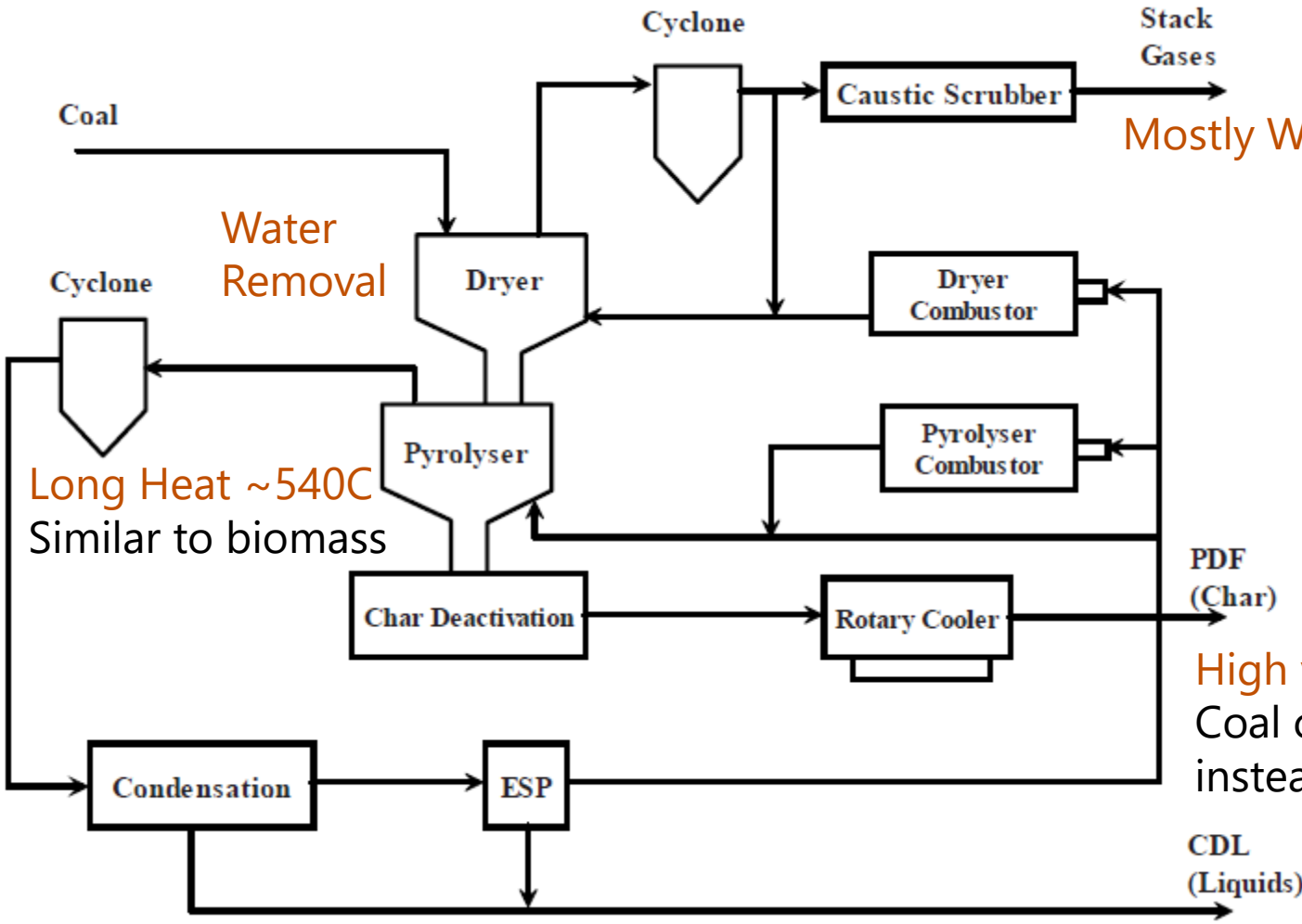

Mostly Water Vapor

Water Removal

Long Heat ~540C

Similar to biomass

High value solids

Coal char suitable for burning instead of pulverized coal

~No. 6 Fuel Oil

Marine engine fuel

Sources: Ghosh 2009 – Ch 6.

2. FISCHER-TROPSCH

Gasoline, Diesel, etc.

Fischer-Tropsch Synthesis

Sources: Shultz Applied Catalysis A: General 186 (1999) 3–12.

- Basic Premise: Use CO and H_2 as fundamental building block.
  - Full reaction: $(2n+1)\ H_2 + n\ CO \rightarrow C_n H_{(2n+2)} + n\ H_2O$
  - Generally predisposed to straight alkyl chains.
  - In conjunction with water gas shift: $H_2O + CO \rightarrow H_2 + CO_2$
    - Promoted by Iron-based catalysts (for low H_2 syngas. "High Temperature")
    - Avoided by Cobalt-based catalysts (use Co for high H_2 syngas "Low Temperature")

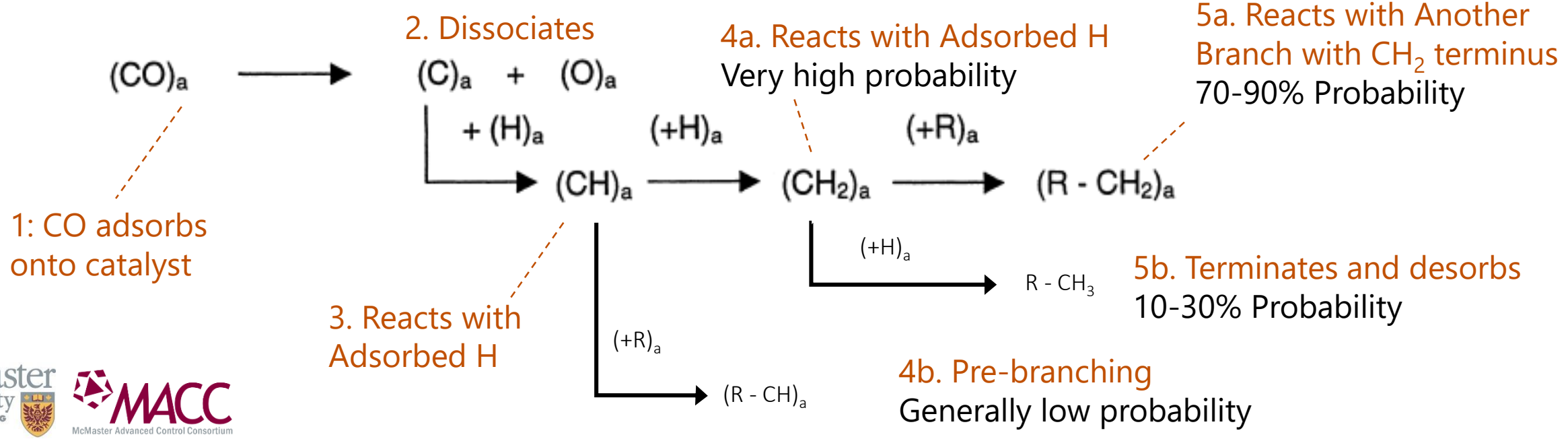

McMaster University ENGINEERING

MACC McMaster Advanced Control Consortium

(Anderson-)Schulz-Flory Kinetics

Start with Schulz-Flory Models (no branching)

α is the probability that a chain with a CH_3 radical will grow by one carbon

(1-α) probability that it will terminate

$0 < \alpha < 1$

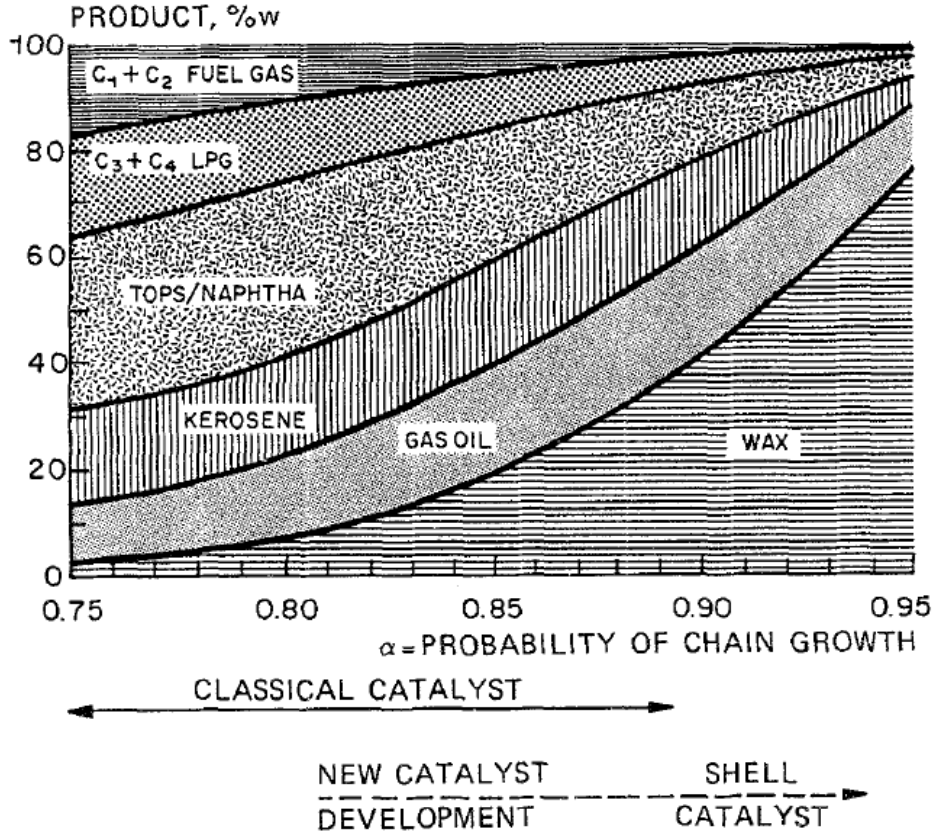

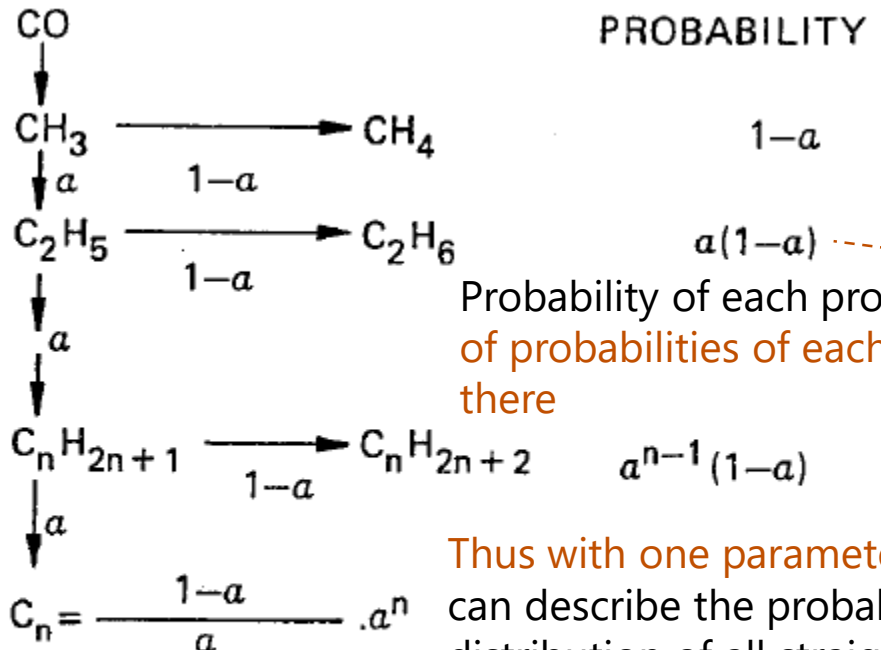

Probability of each product is product of probabilities of each step in getting there

$$C_n = \frac{1-a}{a} \cdot a^n$$

Thus with one parameter alpha we can describe the probability distribution of all straight chains

$$\log C_n = \log \frac{1-a}{a} + n \log a$$

We then select a catalyst and operating conditions that achieve the α of our choosing.

We want very high α for most real applications. Why?

Anderson added probabilities of branching to this model

ASF is actually the most commonly used.

Some History

- FT-Process originally developed in Germany.
- Used in WWII since petroleum supplies cut off
  - Early version provided 9% of Nazi supply. Low temperature, Co.
  - Good for blending (increased the cetane value from petroleum) but otherwise not that great.
- Other Major FT Processing: Sasol in South Africa
  - Only Coal-to-liquid fuels in commercial existence today
  - Now gas-to-liquids has been added (in Secunda, South Africa)
  - Catalysts made to promote olefins (non-fuel products)
  - Blends ~50% petroleum refining products with FT products to make final saleable transportation fuels.
- New (2009) GTL (34,000 barrels/day) in Las Raffan, Qatar

Sources: Leckel D. Energy & Fuels 2009, 23, 2342–2358

Shell – Natural Gas to Liquids

Sources: Ghosh 2009 – Ch 6.
Eilers et al. Catalysis Letters 7 (1990) 253-270.
Leckel D. Energy & Fuels 2009, 23, 2342–2358

Note! The figure in Ghosh 2009 has errors! Heavy oil stream nonsensical.

Shell Middle Distillate Synthesis

Online in Bintuli, Malaysia since 1993.

Co-based FT Synthesis
"Heavy Parrafin Synthesis"
Mostly heavy straight alkanes (wax). 50 bar

Hydrocracking ("Heavy Parrafin Conversion")

Break down long waxes into desired hydrocarbon ranges
Want long waxes because have the highest reactivity, least likely to break into undesired light gases. 30-50 bar

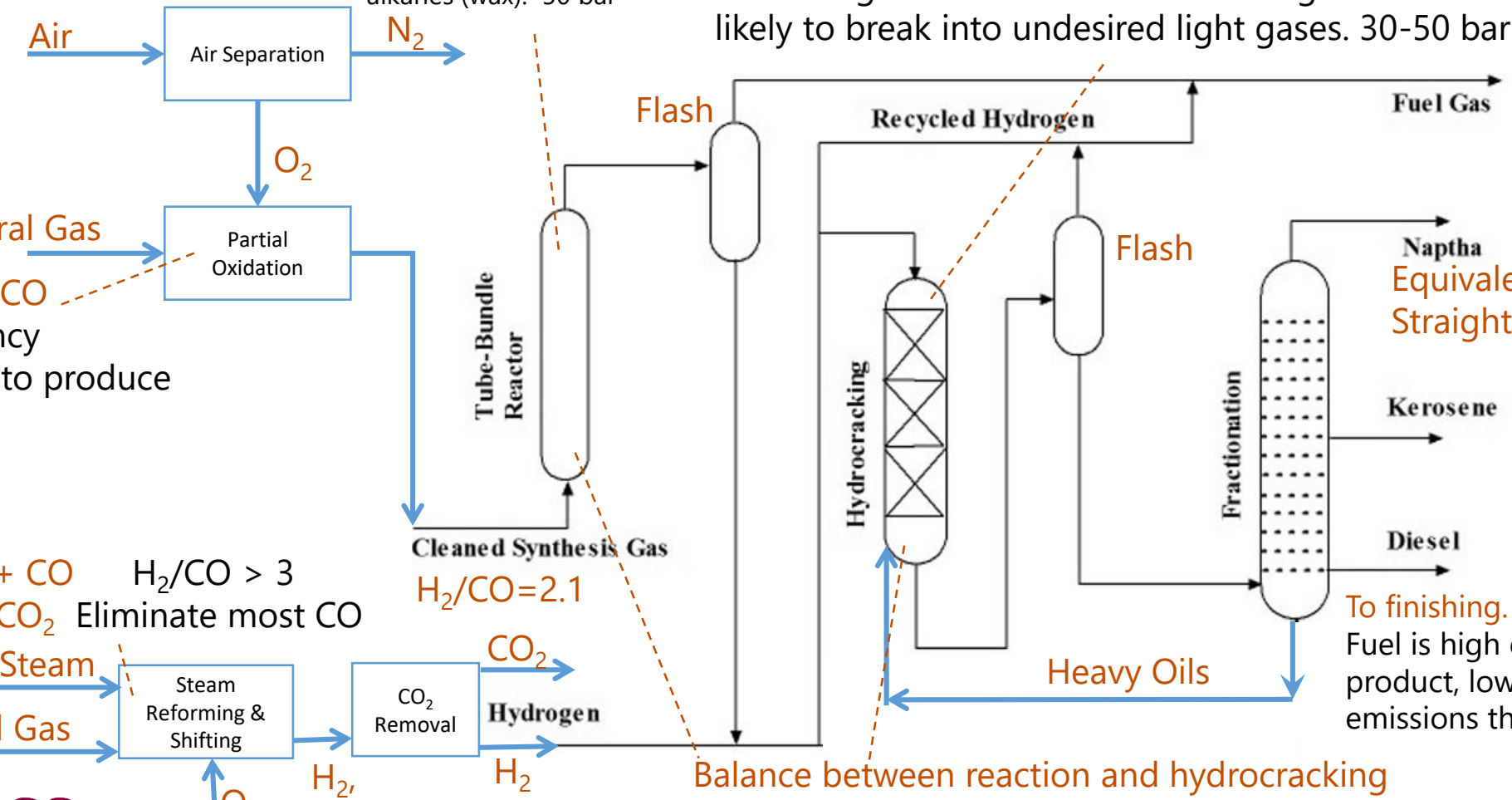

$2CH_4 + O_2 \rightarrow 4H_2 + 2CO$
~80% thermal efficiency
~half the capital cost to produce syngas than coal
70 bar, 1300-1500°C

$CH_4 + H_2O \rightarrow 3H_2 + CO$ $H_2/CO > 3$
$CO + H_2O \rightarrow H_2 + CO_2$ Eliminate most CO

$H_2/CO=2.1$

Equivalent to Straight Run"

To finishing.
Fuel is high quality in end product, lower combustion emissions than petroleum!

Balance between reaction and hydrocracking
Can tune depending on desired product distribution
Choose appropriate catalyst, etc.

McMaster University ENGINEERING
MACC McMaster Advanced Control Consortium

Shell Process Pt. 2

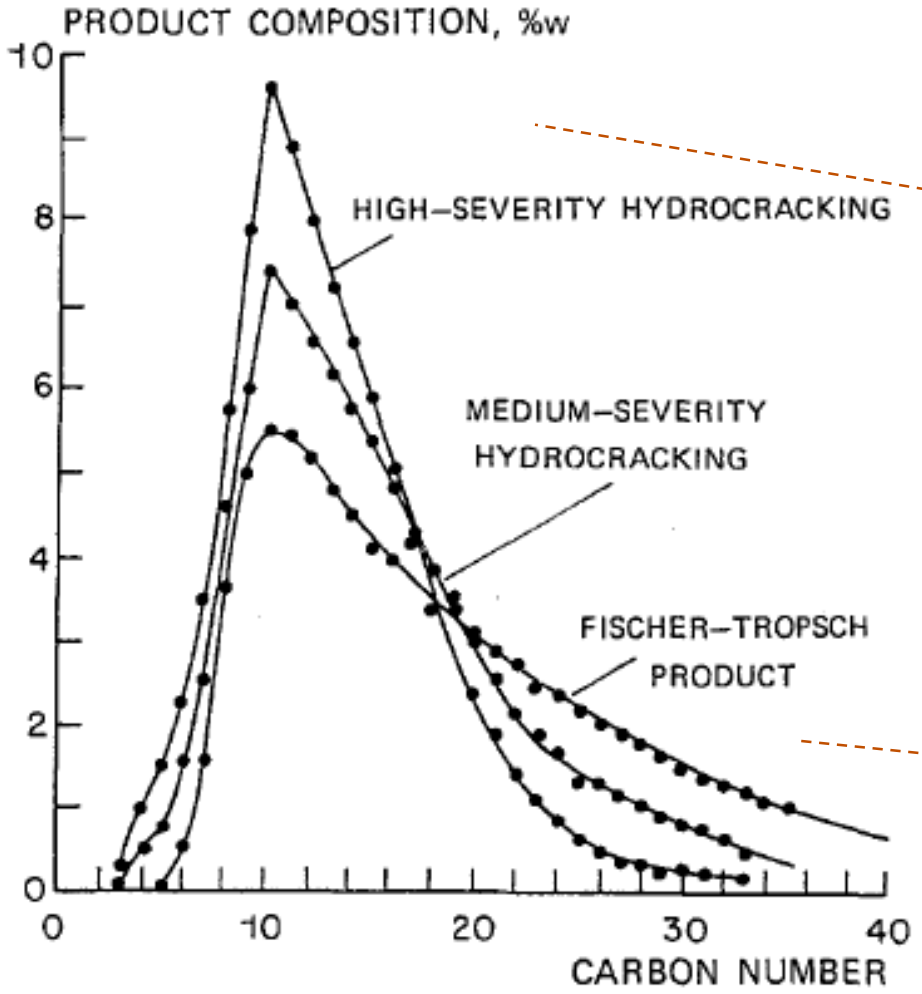

Product Distributions

Depending on configurations and catalysts

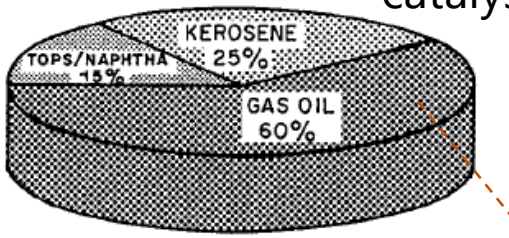

TYPICAL GAS OIL MODE

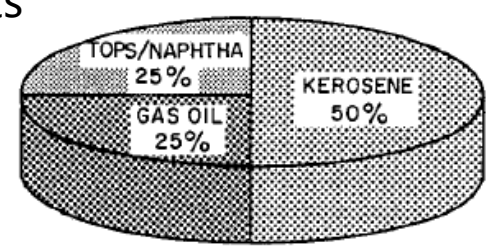

TYPICAL KEROSENE MODE

Note: "Gas Oil" is diesel

In French West Africa, *gasoil* is the word for diesel ("gaz-wole"). Its *gazole* in other parts of the world.

Raw FT Product too broad for specific fuel use

Thus have to narrow the peaks

Process Efficiency: 63% in practice

Sources: Ghosh 2009 – Ch 6.
Eilers et al. Catalysis Letters 7 (1990) 253-270.
Leckel D. Energy & Fuels 2009, 23, 2342–2358

McMaster University ENGINEERING
MACC McMaster Advanced Control Consortium

Coal-To-Liquids

Sources: T.A. Adams II, P.I. Barton / Fuel Processing Technology 92 (2011) 639–655

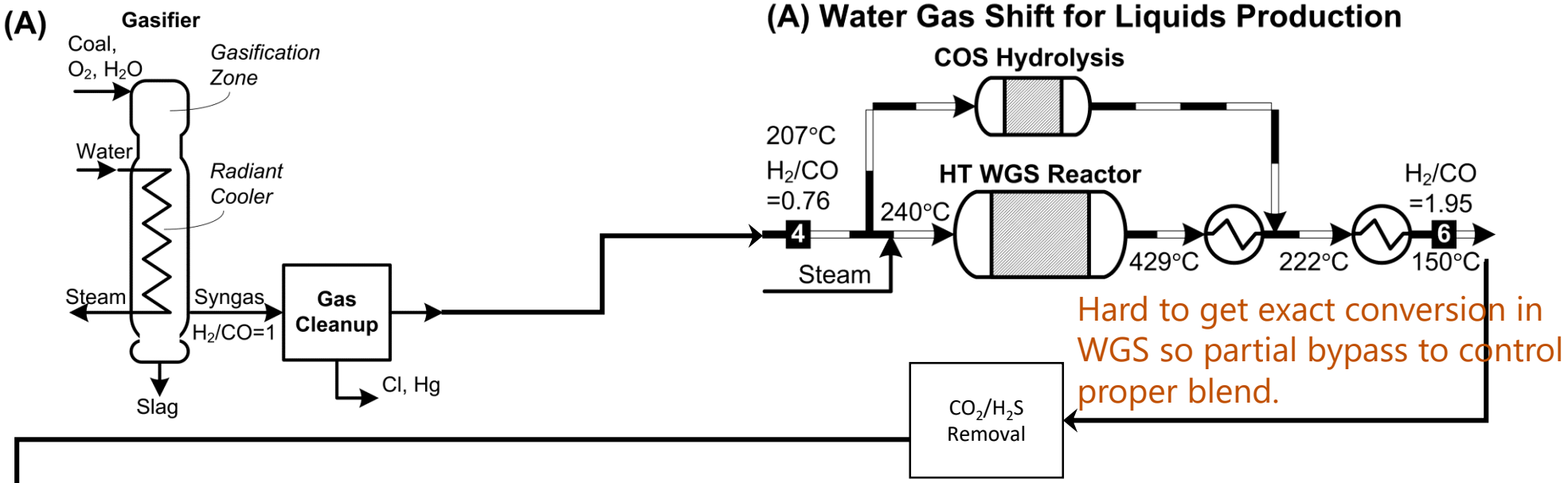

Hard to get exact conversion in WGS so partial bypass to control proper blend.

Reduce Light Gases by Recycling and Reforming

$CH_4 + H_2O \rightarrow 3H_2 + CO$

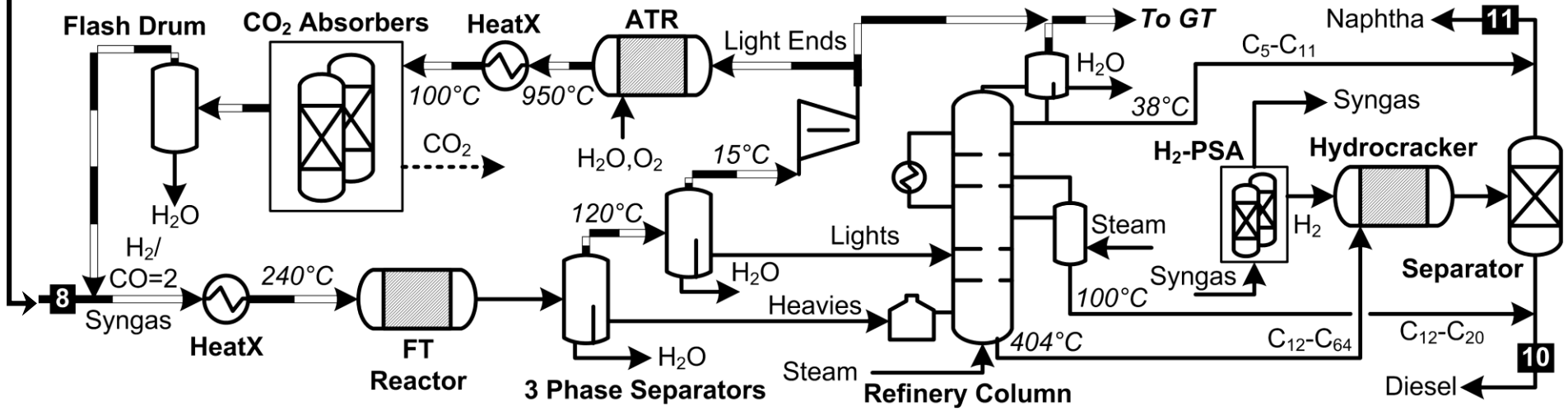

McMaster University ENGINEERING

MACC McMaster Advanced Control Consortium

Alternative Syngas from Nat Gas.

Steam Reforming:

$CH_4 + H_2O \rightarrow 3H_2 + CO$ (Endothermic)

Water Gas Shift :

$CO + H_2O \rightarrow H_2 + CO_2$ (Mildly exothermic)

CO_2 Reforming:

$CO_2 + CH_4 \rightarrow 2CO + 2H_2$ (Highly endothermic)

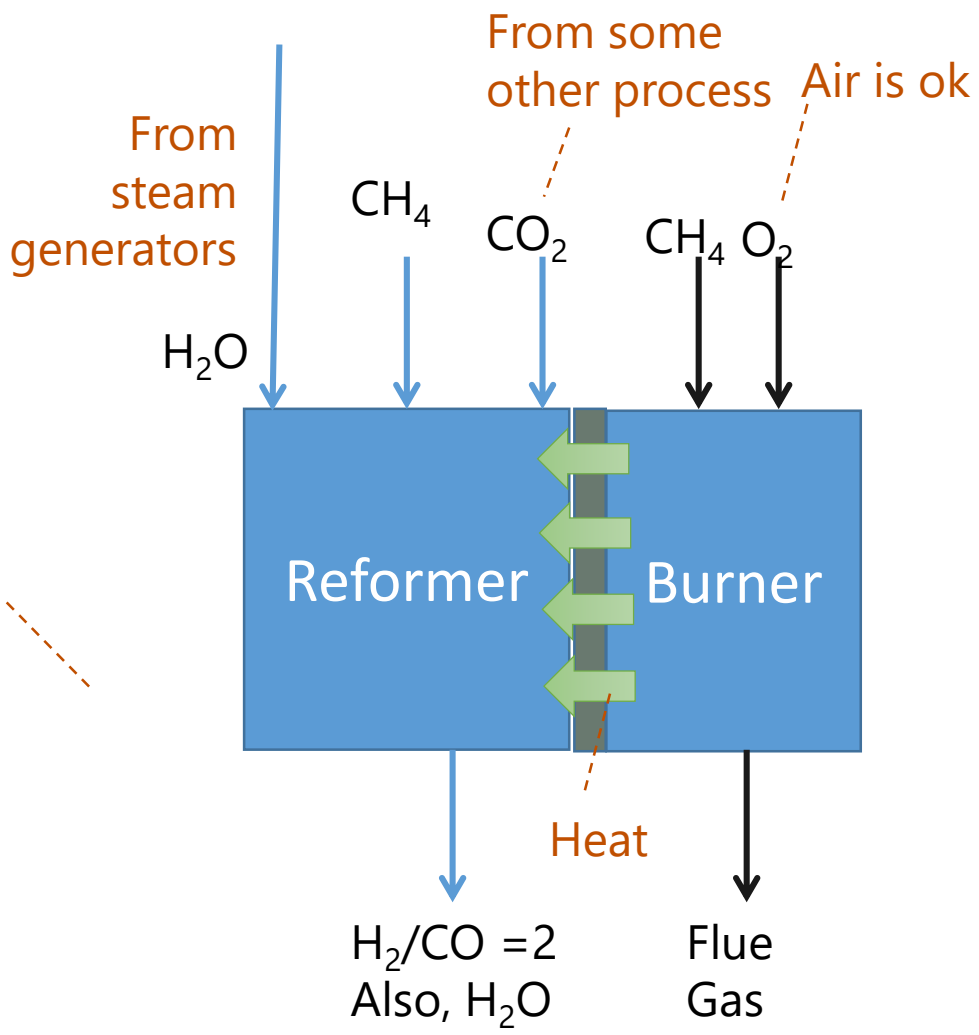

McMaster University ENGINEERING
MACC McMaster Advanced Control Consortium

Coal & Nat. Gas Syngas production

Traditional

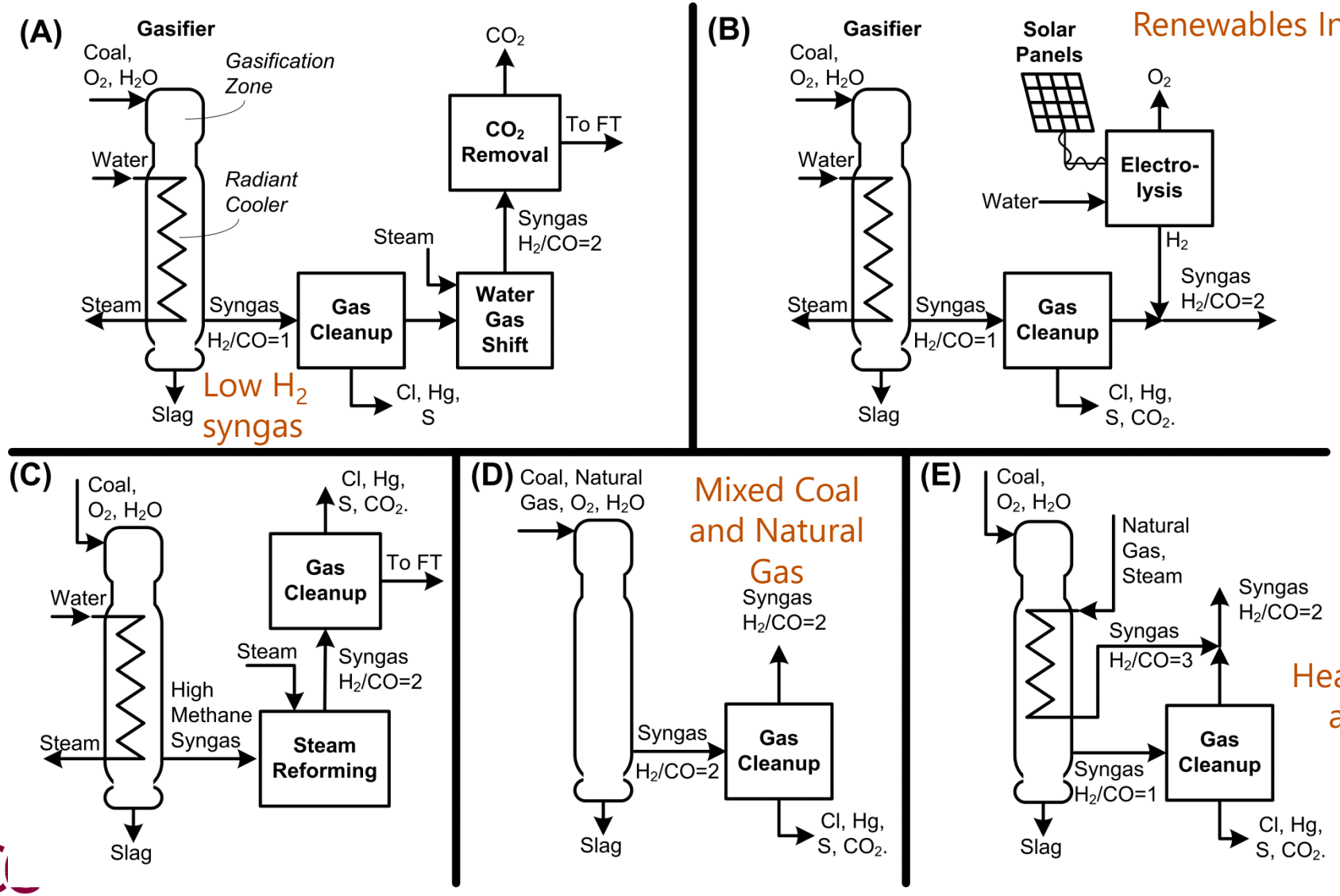

High Methane Gasifiers (especially biomass)

McMaster University ENGINEERING

MACC McMaster Advanced Control Consortium

Sources: T.A. Adams II, P.I. Barton / Fuel Processing Technology 92 (2011) 639–655

Biomass and Gas to Fuels

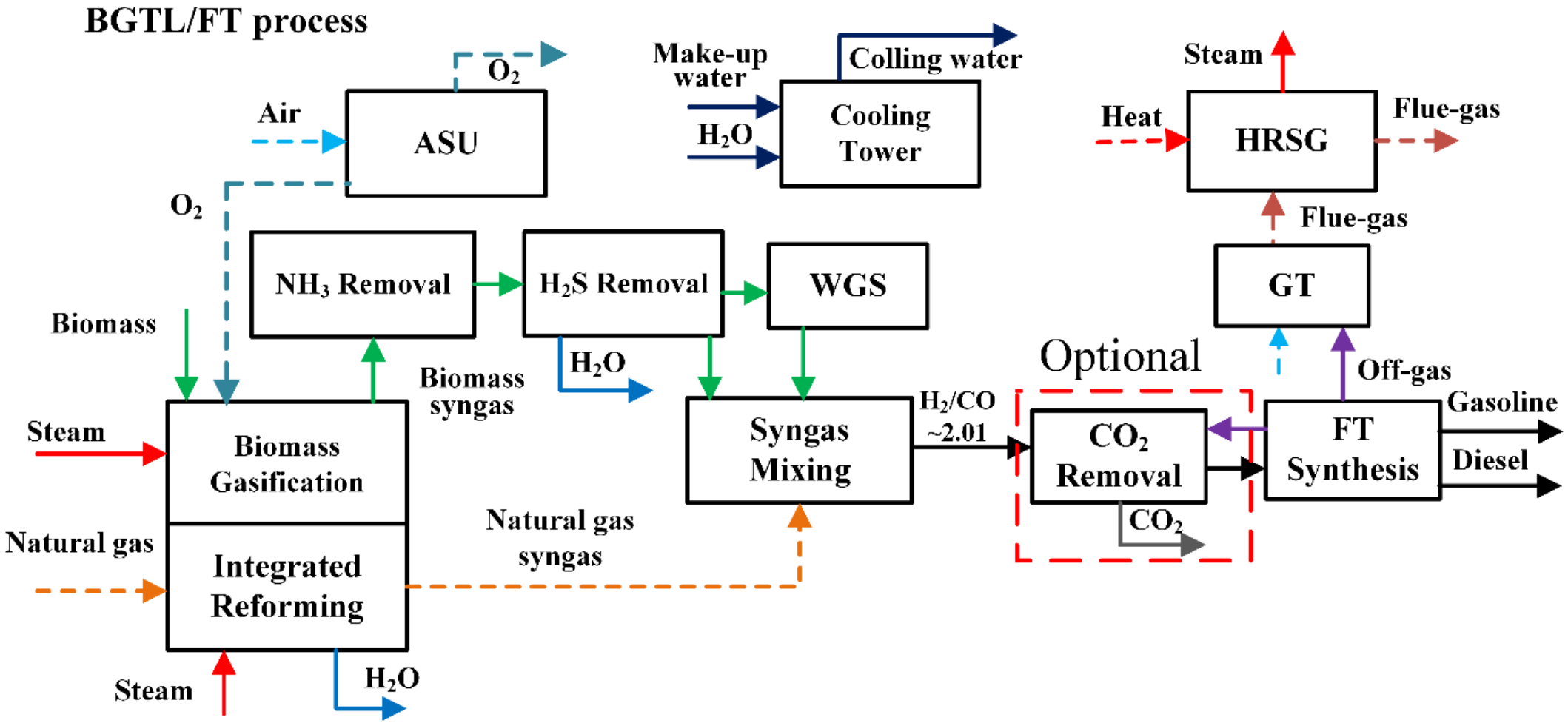

Sources: Hoseinzade L, Adams TA II. Techno-economic and environmental analyses of a novel, sustainable process for production of liquid fuels using helium heat transfer. *Applied Energy,* In review (2018)

Biomass, Gas, and Nuclear to Fuels!

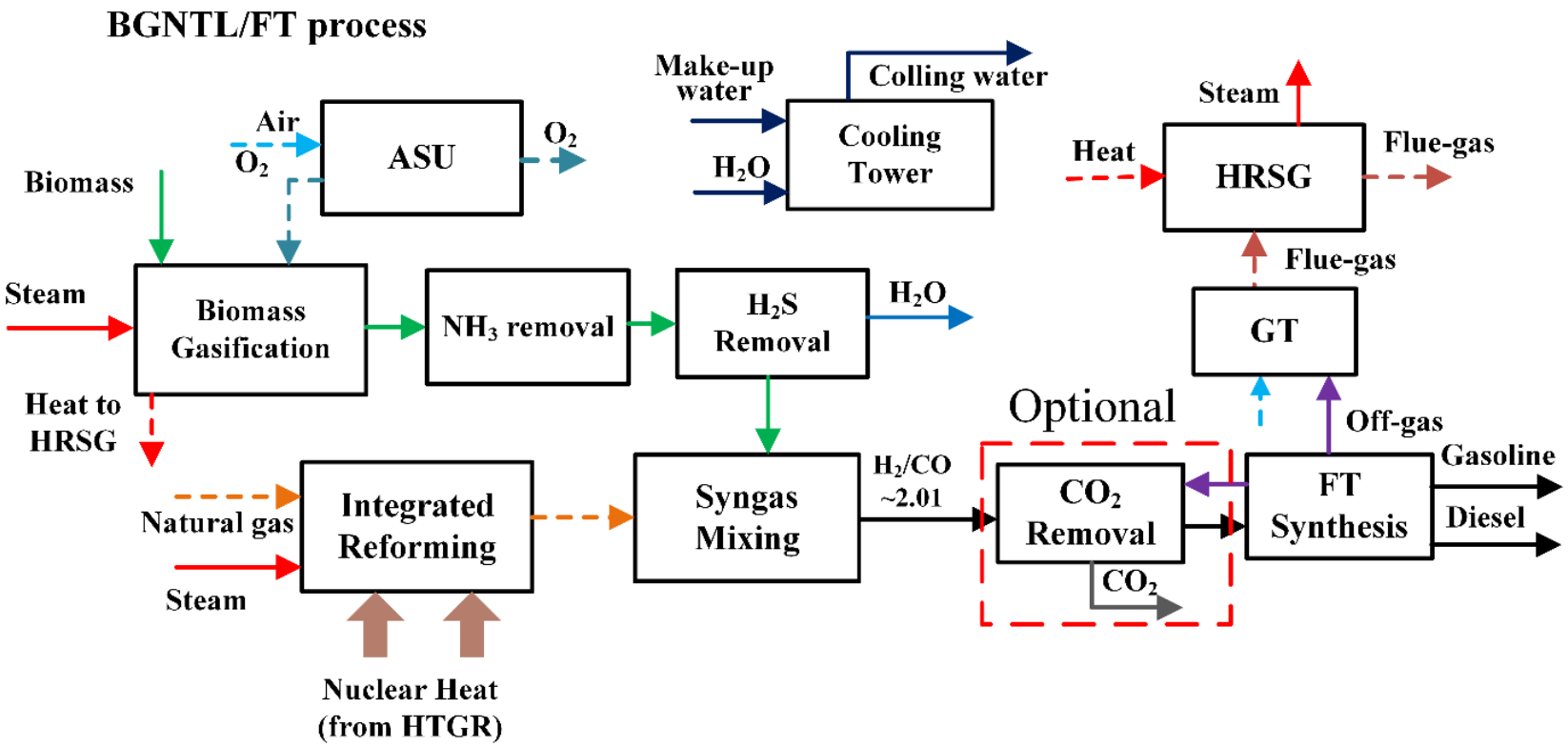

The most profitable process without incentives

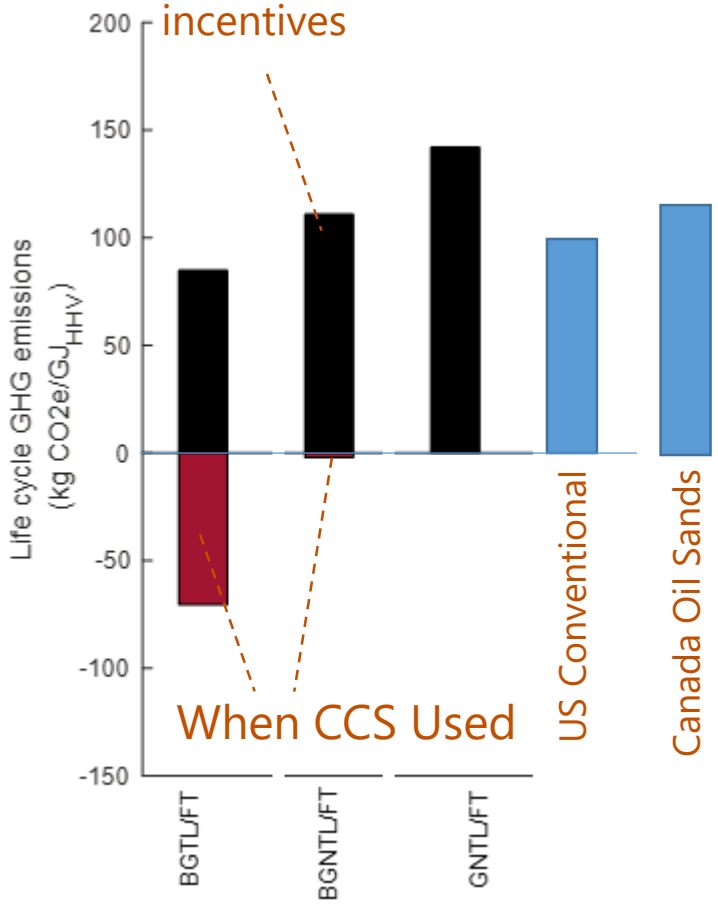

McMaster University ENGINEERING

MACC McMaster Advanced Control Consortium

Sources: Hoseinzade L, Adams TA II. Techno-economic and environmental analyses of a novel, sustainable process for production of liquid fuels using helium heat transfer. *Applied Energy*, In review (2018)
Cai H, et al. Well-to-Wheels Greenhouse Gas Emissions of Canadian Oil Sands Products: Implications for U.S. Petroleum Fuels. *Enviro Sci Technol* 49:8219-8227 (2015)

Biomass, Gas, and Nuclear to Fuels!

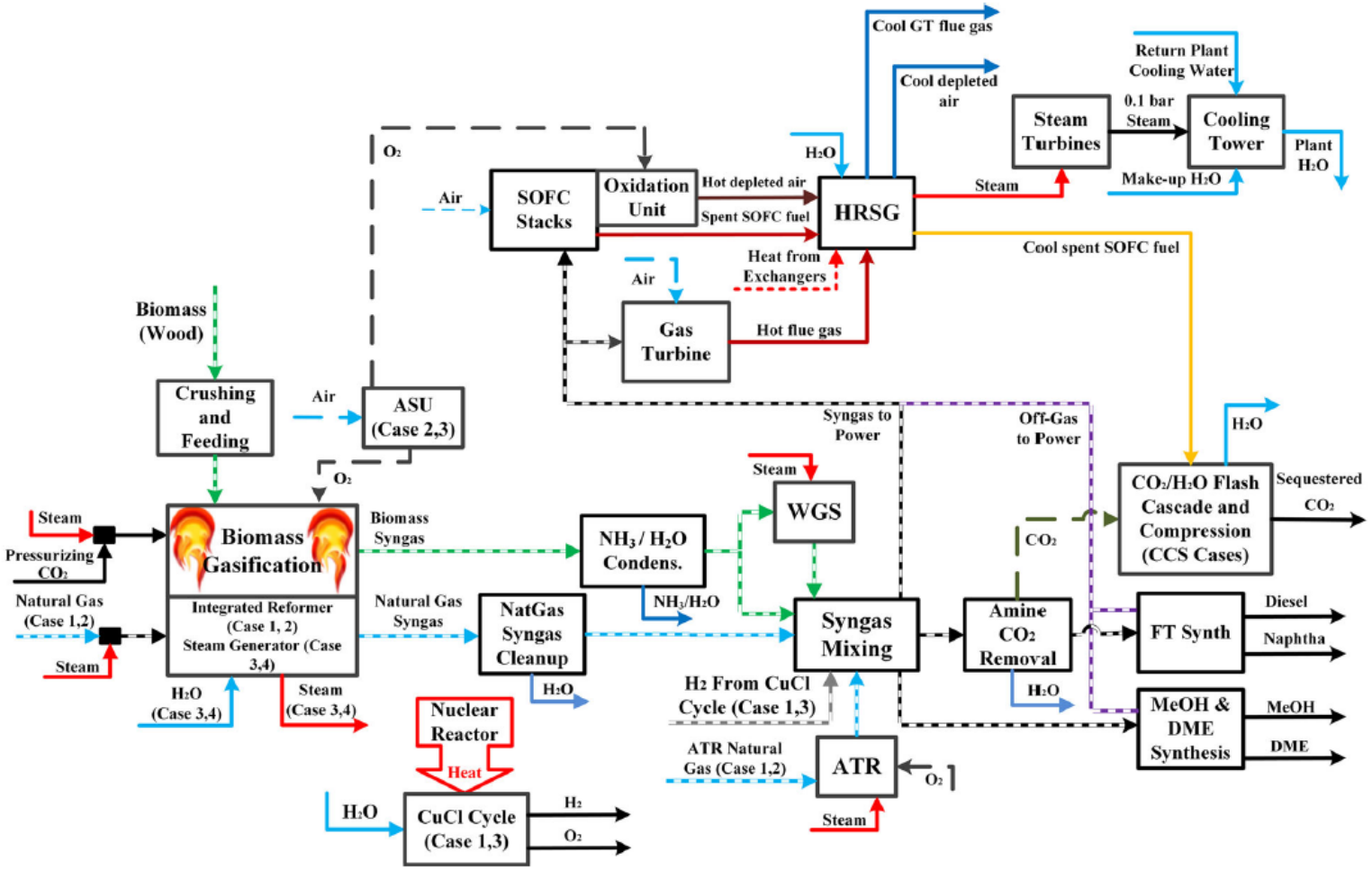

McMaster University ENGINEERING

MACC McMaster Advanced Control Consortium

Sources: Scott JA, Adams TA II. Biomass-Gas-and-Nuclear-To-Liquids (BGNTL) Processes Part I: Model Development and Simulation . *Canadian J Chem Eng.* 96:1853-1871 (2018).

Course Evaluations!

- Time for Course Evaluations!
- Go to

- https://evals.mcmaster.ca/