Alternative Fuels (not BioFuels)

A difficult paradigm shift.

Thomas A. Adams II
McMaster University
Department of Chemical Engineering
McMaster Advanced Control Consortium
McMaster Institute for Energy Studies

Lecture 5.4 – 2018 Edition

1. Methanol

Fuel and feedstock

Methanol

- 75 million tonnes annual global production
  - (125 million liters)
- Basic chemical:
  - Formaldehyde
  - Acetic acid
- Fuel
  - Direct fuel (racing!)
  - Create Dimethyl Ether (diesel substitute)
  - Convert to gasoline directly
  - Flexible fuel vehicles can run on any combination of methanol, ethanol, and gasoline

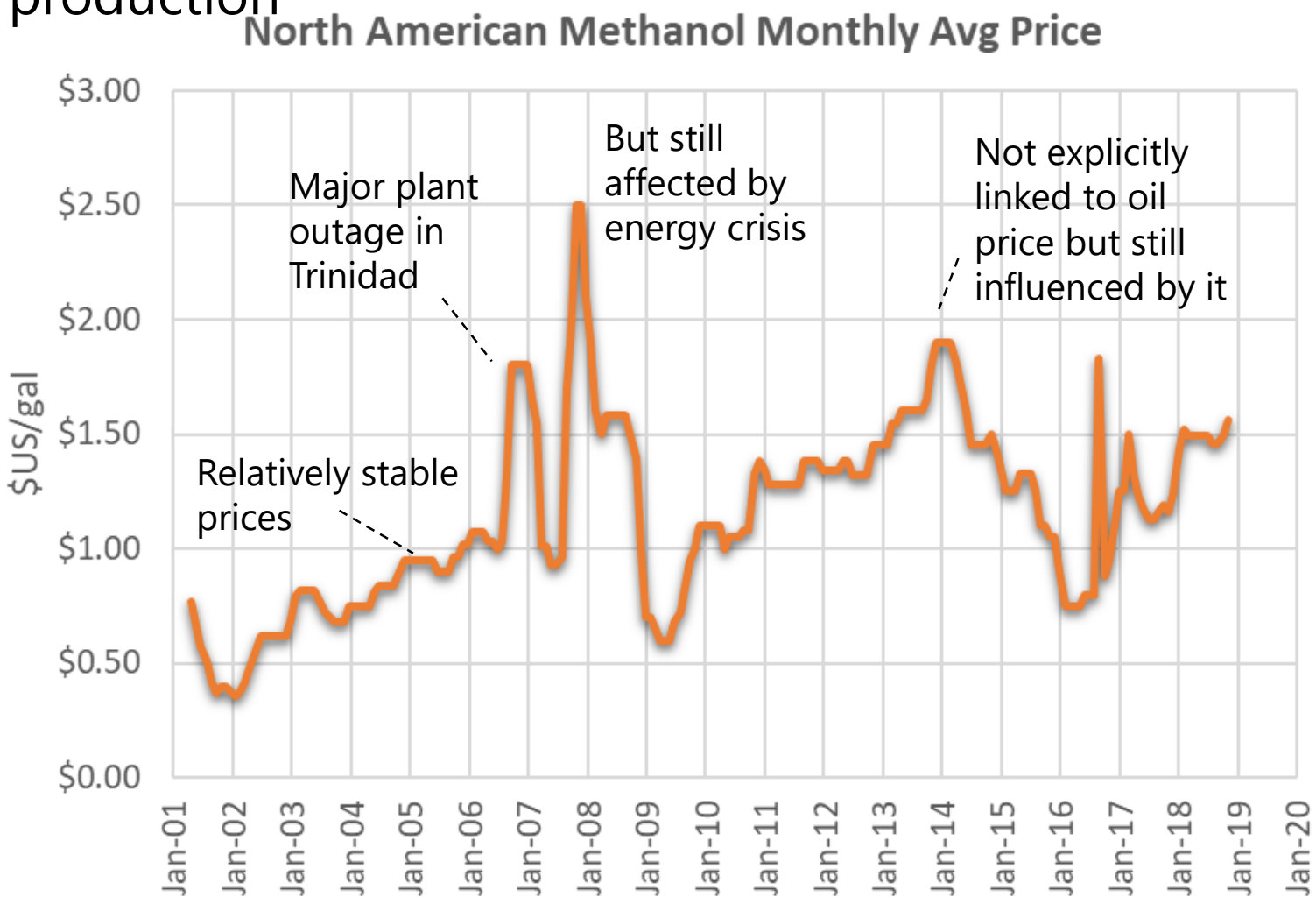

Sources: The Methanol Institute. Methanex.com.
Wilson J, Burgh, G. Energizing our Future, Chapter 7 (2008).

McMaster University ENGINEERING

MACC McMaster Advanced Control Consortium

Methanol as Fuel

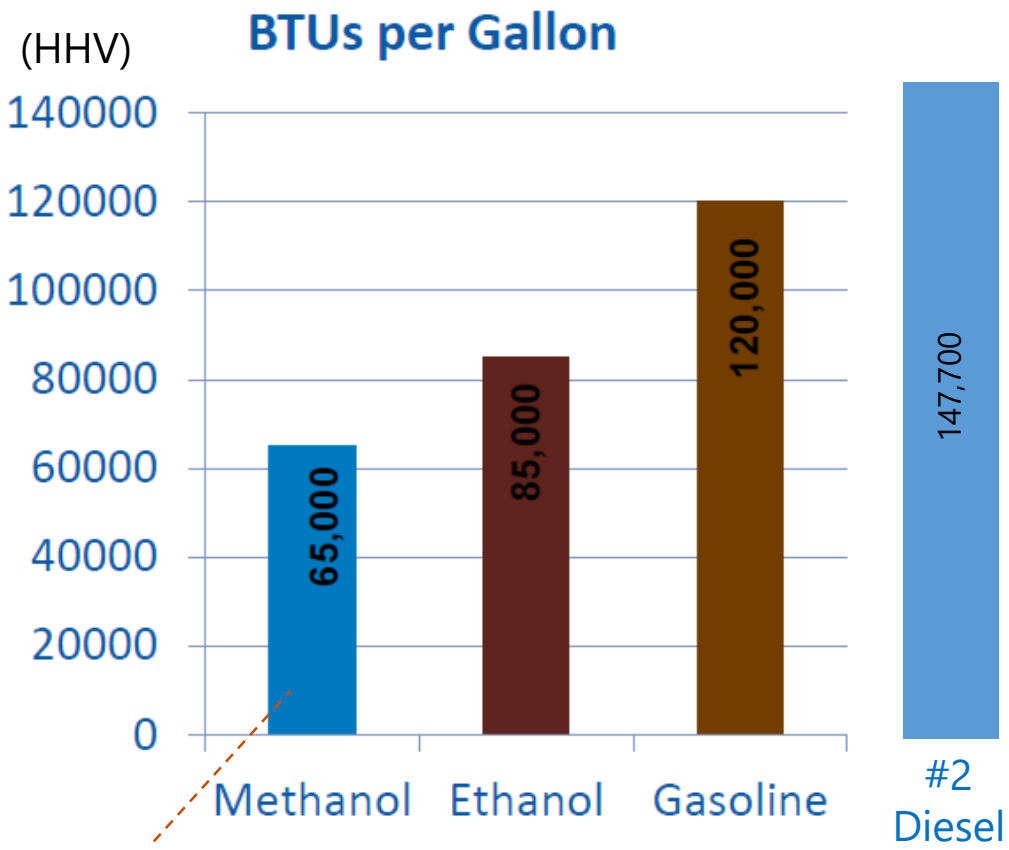

Half the energy density of gasoline!
So you have to refuel twice as often.

- High octane rating (120)
  - Ethanol = 113
  - Can be used up to M15 blends in most cars
    - US Limit: <5 vol% MeOH.
  - Used originally to make MTBE (smog reducer in gasoline blends)
    - Turned out MTBE was a carcinogen… oops.
- High toxicity (ethanol lobby overstates it…)

McMaster University ENGINEERING
MACC McMaster Advanced Control Consortium

Sources: National Renewable Energy Laboratory. "Technoeconomic comparison of biofuels: ethanol, methanol, and gasoline from gasification of woody residues" Wilson J, Burgh, G. Energizing our Future, Chapter 7 (2008). Also, the Methanol Institute, "Methanol Gasoline Blends", .

Comparison vs. Gasoline

Property	Methanol	Gasoline
RON	106	88
Stoichiometry air/fuel ratio	6.5	14.7
Density (kg/l)	0.79	0.74
Oxygen content by mass (%)	50	0
Volumetric energy content (MJ/l)	15.0	31.7
Heat of vaporization (kJ/kg)	1100	180-350
Specific CO2 emissions (g/MJ)	68.44	73.95
Lower heating value (MJ/kg)	20.09	42.9
Energy per unit mass of air (MJ/kg)	3.12	2.95

Lower CO_2 emissions per MJ delivered. But…

Requires less air consumption (lower parasitic loads)

McMaster University ENGINEERING

MACC McMaster Advanced Control Consortium

Sources: Rifal M, Sinaga N. Impact of methanol-gasoline fuel blend on the fuel consumption and exhaust emission of a SI engine. AIP Conference Proceedings 1725 , 020070 (2016); doi: 10.1063/1.4945524

Emissions vs. Gasoline

Methanol Tailpipe CO_2 Emissions are higher when adjusted for same power and engine speed

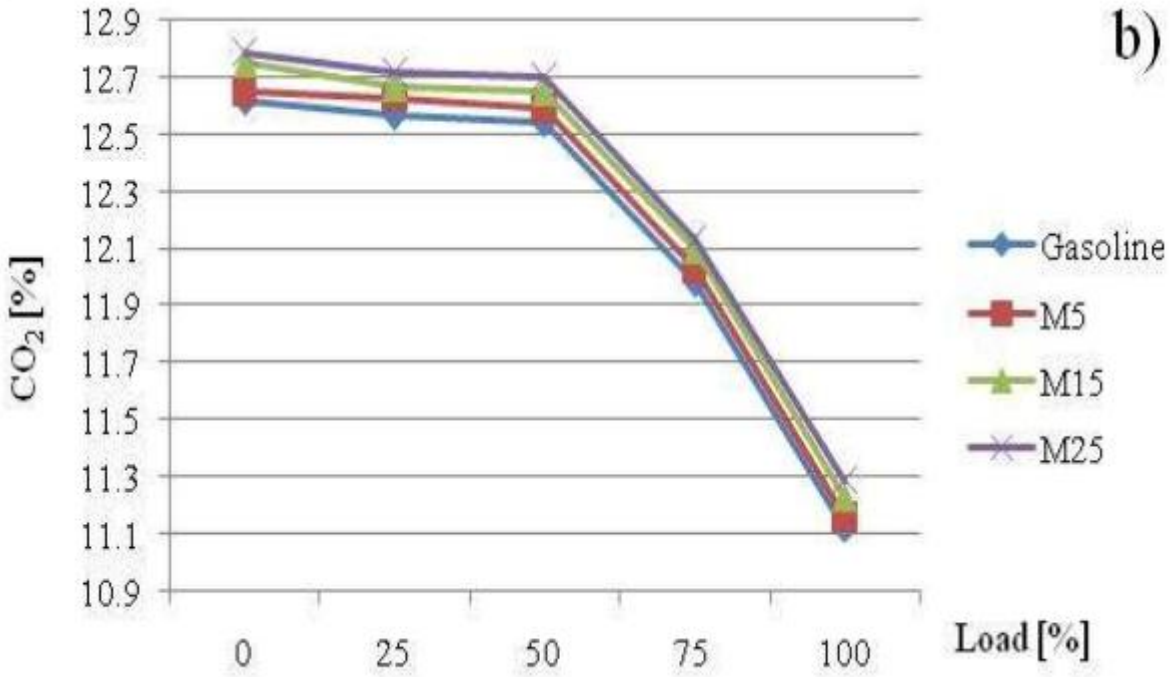

But everything else is lower (CO, hydrocarbons, soot)

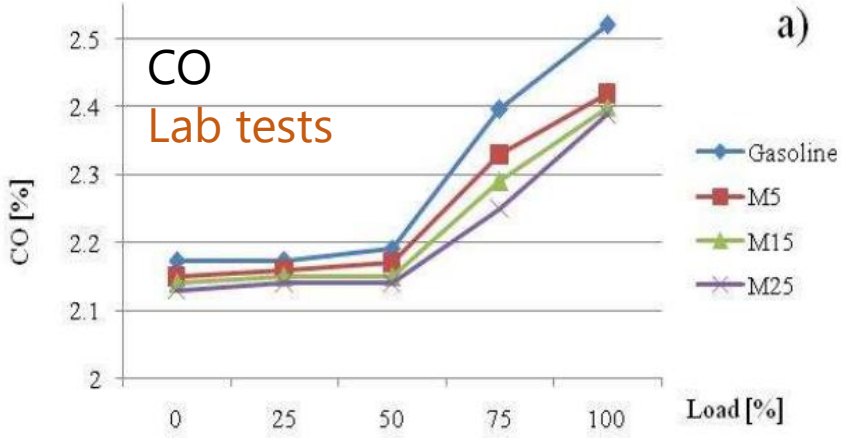

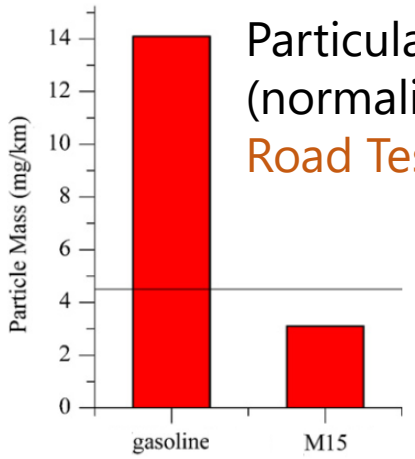

So CO_2 is just slightly worse from the tailpipe but local emissions are better. Could CO_2 be better considering the whole life cycle, making it better in all categories?

McMaster University ENGINEERING

MACC McMaster Advanced Control Consortium

Sources: Dima Alexandru et al. Evaluation of performance and emissions characteristics of methanol blend (gasohol) in a naturally aspirated spark ignition engine 2017 IOP Conf. Ser.: Mater. Sci. Eng. 252 012086
B. Liang et al. / Journal of Aerosol Science 57 (2013) 22–31

Methanol from Syngas

Methanol synthesis:

$$CO + 2H_2 \rightleftharpoons CH_3OH$$

Side Reactions:

$$2CH_3OH \rightarrow C_2H_5OH + H_2O$$

(0.3% conversion)

(ethanol)

$$CH_3OH + CO \rightarrow HCOOCH_3$$

(0.08% conversion)

(methyl formate)

Have to purge
87% syngas, 13% CO_2.
(CO_2 from WGS reaction)

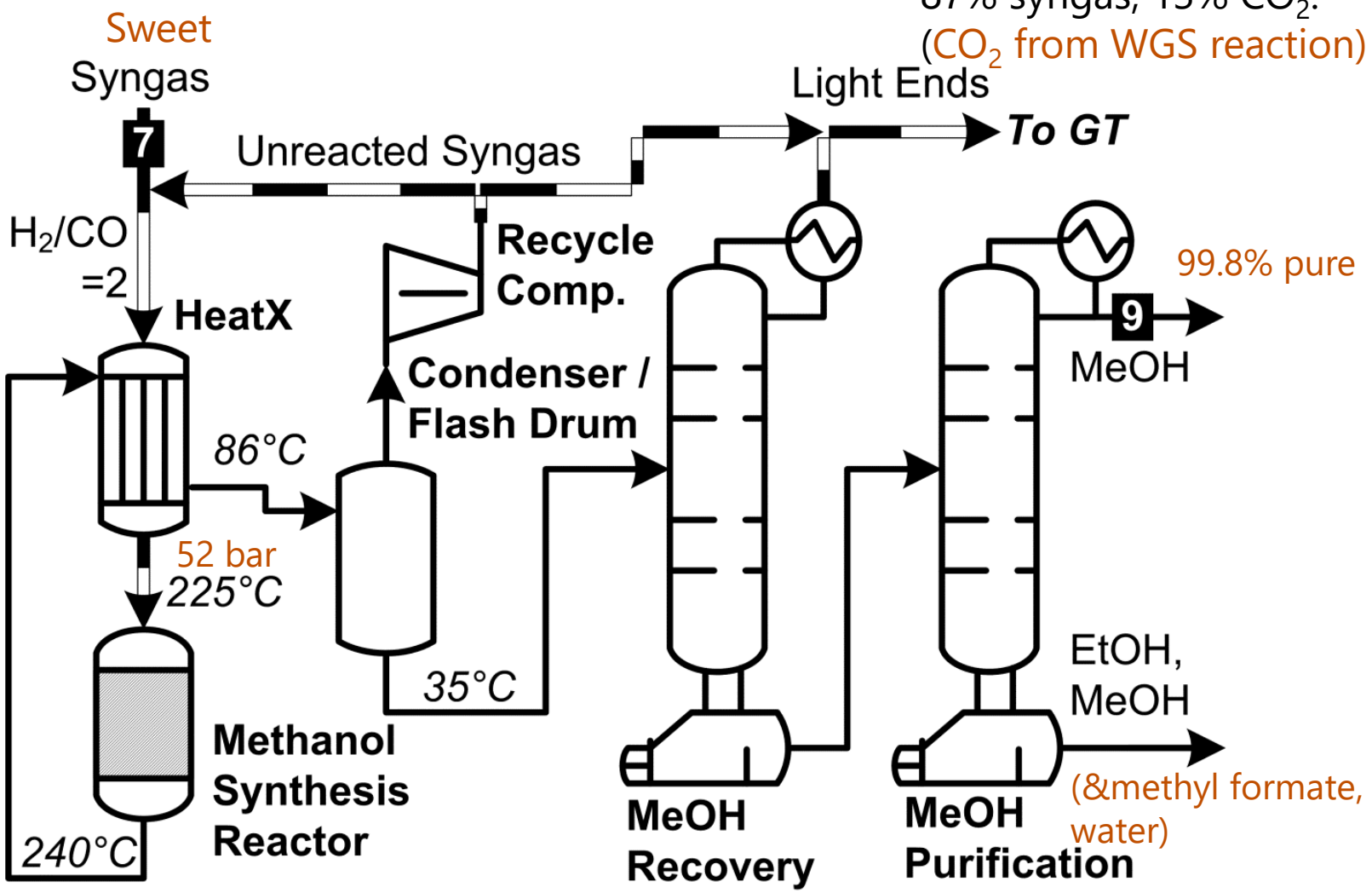

Sources: T.A. Adams II, P.I. Barton / Fuel Processing Technology 92 (2011) 639–655

Key Future Methanol markets

- Fuel for direct methanol fuel cells (didn't discuss… not quite ready)
- 2016: India (via National Institution for Transforming India) embracing the methanol economy
  - Primarily interested in methanol as energy storage and
  - Methanol as precursor to other fuels and chemicals
- China moving toward coal-to-methanol technologies
  - Again, as chemical intermediate to other fuels and chemicals.

Sources Anselmo, A. ChemBioPower white paper: DME in India, China, and Russia (2016) version 14.

Methanol as Energy Storage / Intermediate

Wellhead

Nat Gas Production → Pipeline, LNG tankers → Chemical Plants: Conversion to Other Products

Nat Gas Production | Gas-To-Methanol → Pipeline / tankers → Conversion to Other Products

May be considerably cheaper / easier to transport and store methanol vs. gas

Capture and sequester CO_2 at wellhead.

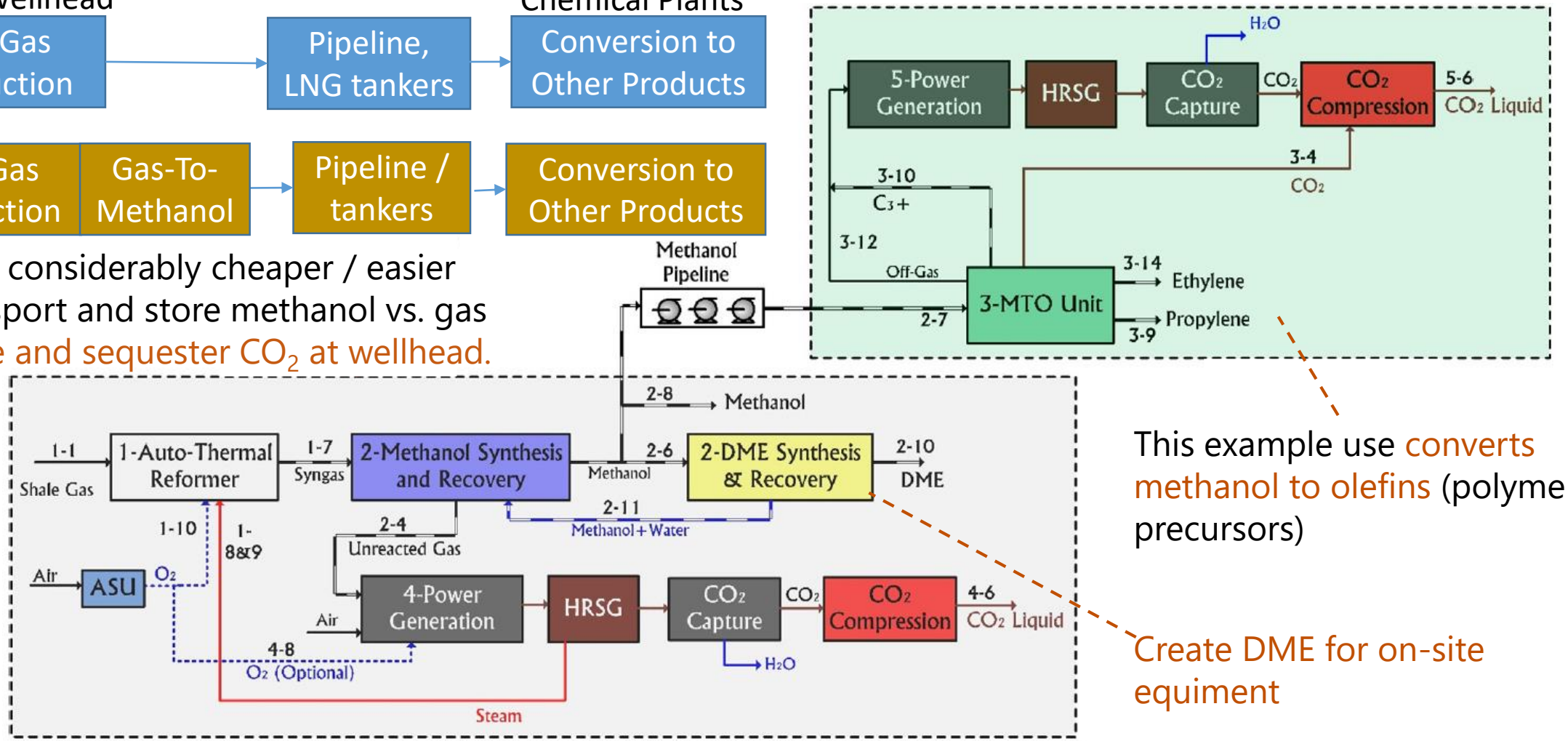

This example use converts methanol to olefins (polymer precursors)

Create DME for on-site equiment

McMaster University ENGINEERING

MACC McMaster Advanced Control Consortium

Sources: Khojestah Salkuyeh Y, Adams TA II. Co-Production of Olefins, Fuels, and Electricity from Conventional Pipeline Gas and Shale Gas with Near-Zero CO2 Emissions. Part I: Process Development and Technical Performance. *Energies* 2015, 8, 3739-3761; doi:10.3390/en8053739

2. Dimethyl ether

Fuel and feedstock

Dimethyl Ether (DME)

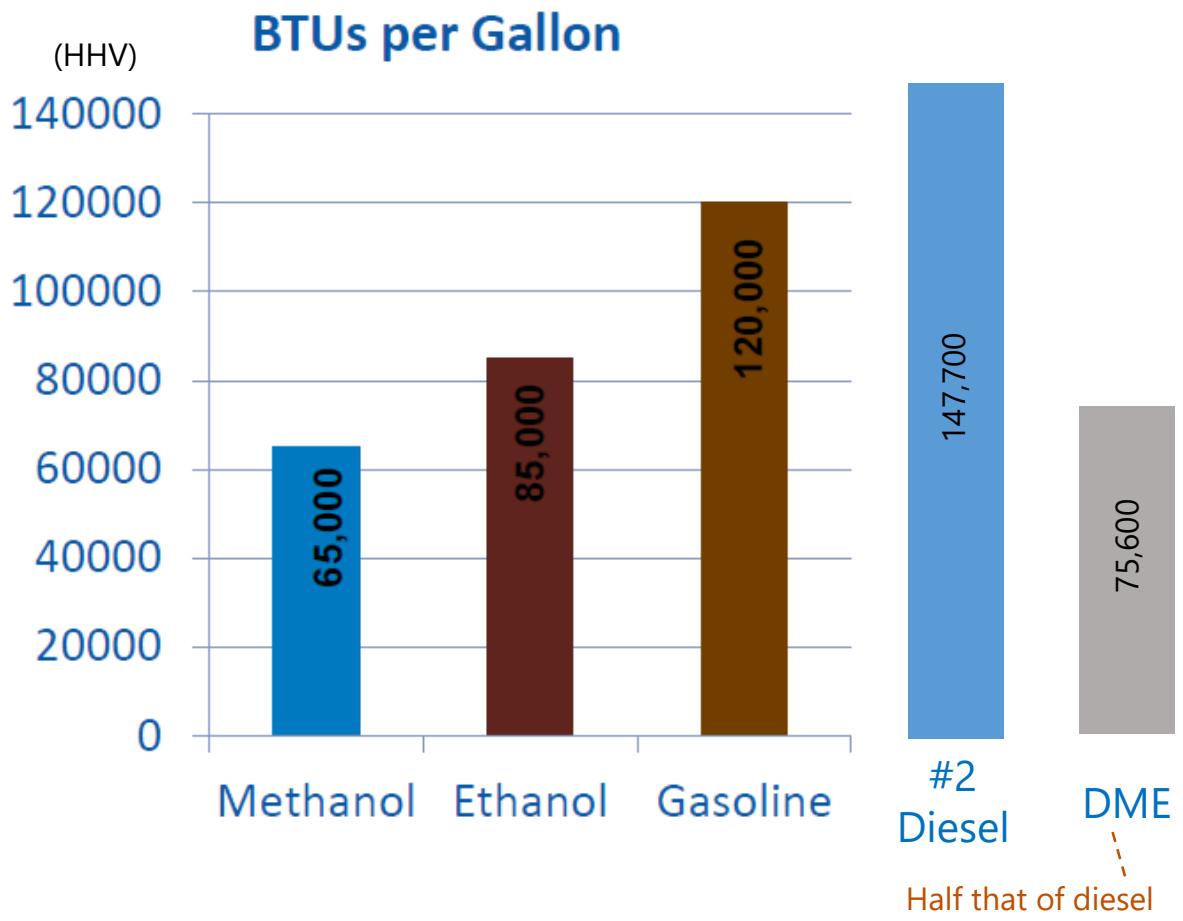

- CH_3OCH_3

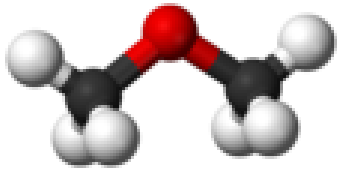

- Diesel substitute
  - Cetane #55-60
  - (Diesel is ~55)
  - No engine mods
  - 20x Lower viscosity (bad… leaky)
  - Need fuel injector replacement (not very expensive)
- "Environmentally benign"
  - Non-carcinogenic
  - Non-toxic

Sources: National Renewable Energy Laboratory. "Technoeconomic comparison of biofuels: ethanol, methanol, and gasoline from gasification of woody residues"
Essom.com , "Heating Values of hydrogen and fuels" http://www.essom.com/backend/data-file/engineer/engin21_1.pdf
T.A. Semelsberger et al. / Journal of Power Sources 156 (2006) 497–511

DME is a clean burning fuel

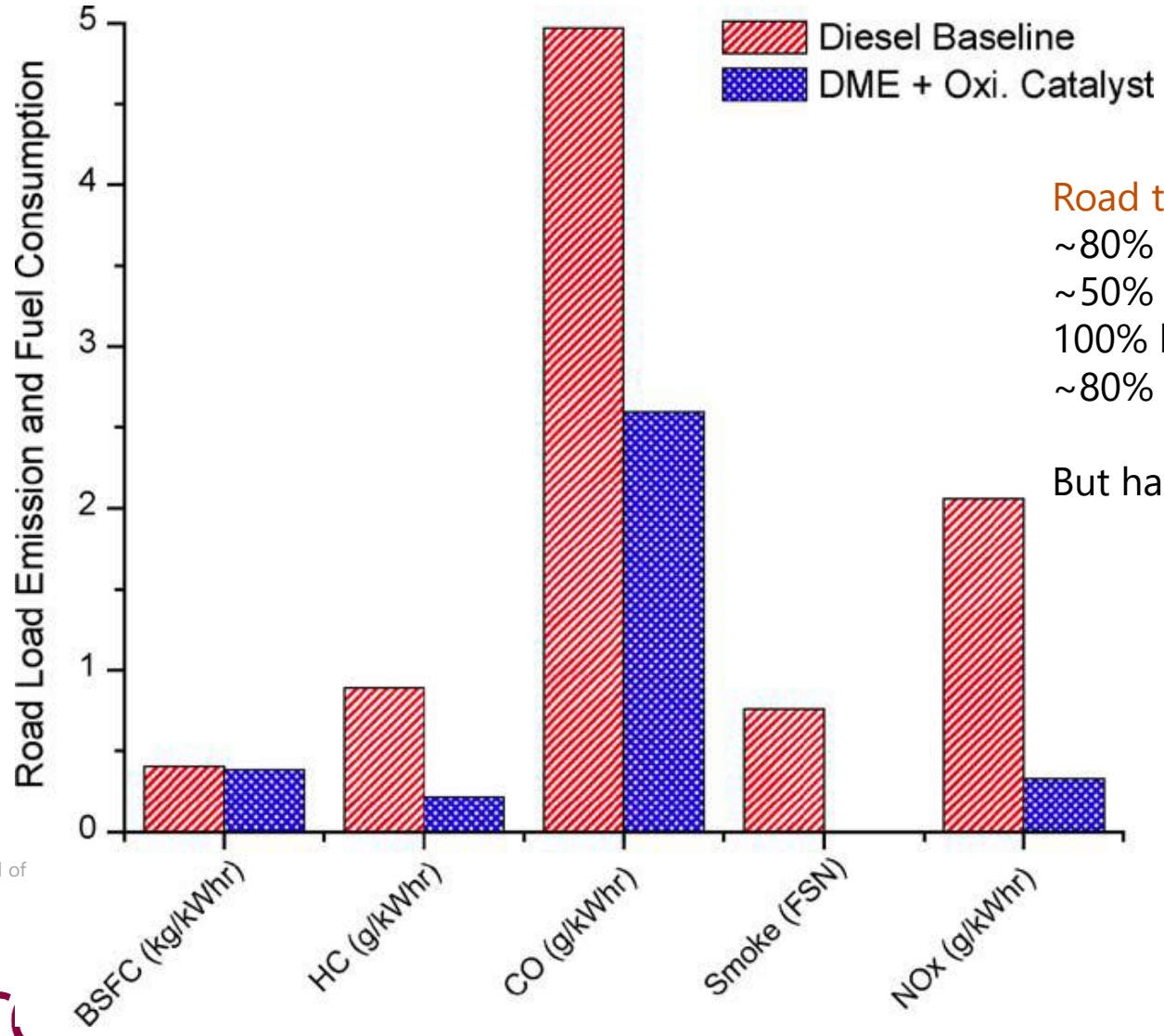

Road test results using "neat" DME and diesel.
~80% less hydrocarbons (global warming)
~50% less CO (poison)
100% less soot / smoke (air quality)
~80% less NO_X (smog-forming)

But half the energy density…

Sources: T.A. Semelsberger et al. / Journal of Power Sources 156 (2006) 497–511

McMaster University ENGINEERING

MACC McMaster Advanced Control Consortium

DME Trucks?

- Volvo has been developing DME-trucks for some time
- Were hoping to have it ready by now, but now they no longer give a target date, citing "a slowdown in the pace of the North American alternative fuel market."
  - [read: high oil prices]
- Similar in power and performance to diesel
  - Can actually retrofit a truck with a new fuel injection system
- Storage is more like propane
  - Now it's about compressed gases

Two-Step DME Synthesis

Methanol dehydration:

$2CH_3OH \rightleftharpoons CH_3OCH_3 + H_2O$ (slightly exothermic)

Desire high pressures (50 bar)

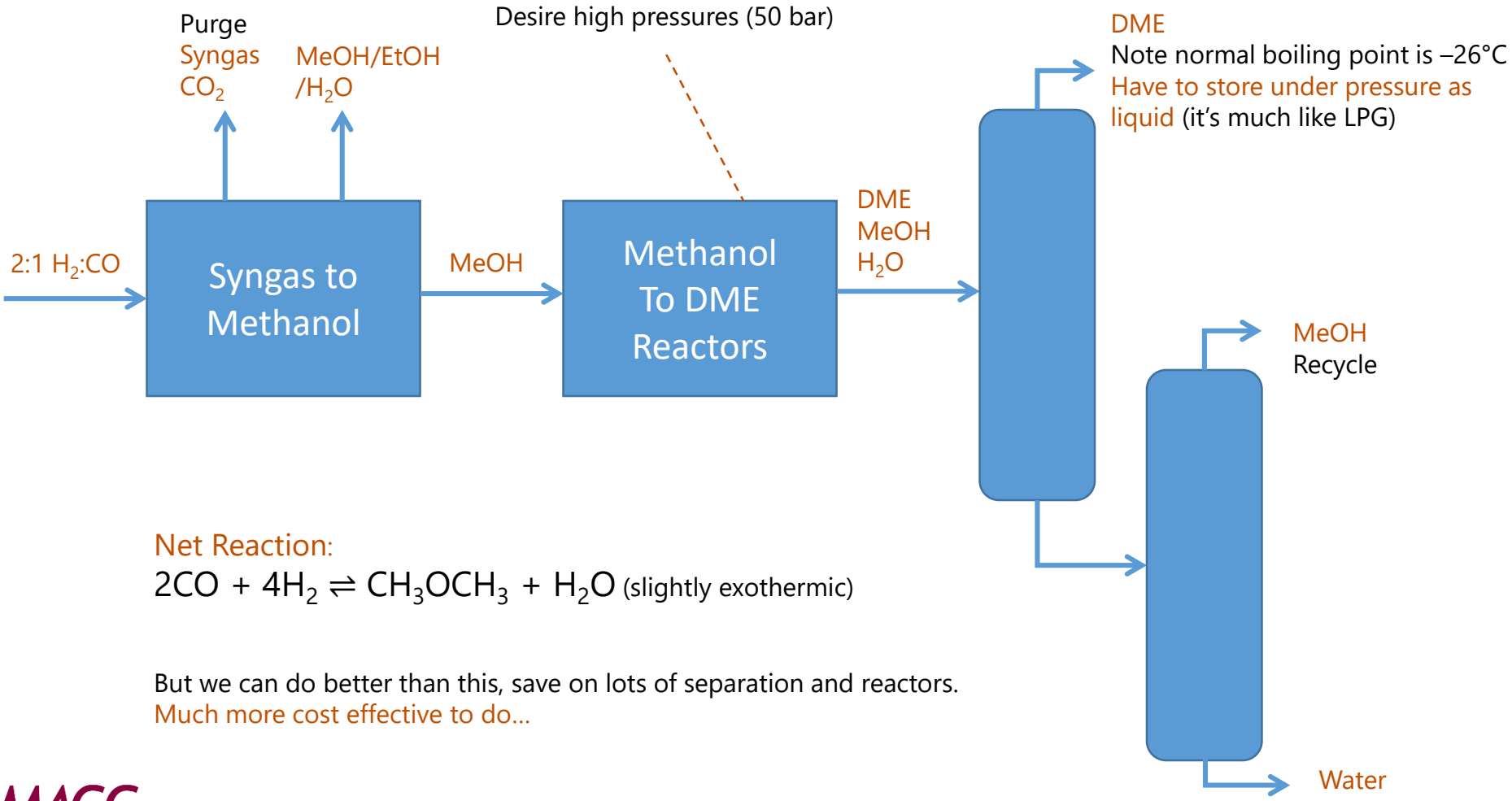

Net Reaction:

$2CO + 4H_2 \rightleftharpoons CH_3OCH_3 + H_2O$ (slightly exothermic)

But we can do better than this, save on lots of separation and reactors.
Much more cost effective to do…

Sources: T.A. Semelsberger et al. / Journal of Power Sources 156 (2006) 497–511

Single Step DME Synthesis

Simultaneously react all three together.

Methanol synthesis:
$CO + 2H_2 \rightleftharpoons CH_3OH$

Methanol Dehydration:
$2CH_3OH \rightleftharpoons CH_3OCH_3 + H_2O$

Water Gas Shift:
$CO + H_2O \rightleftharpoons CO_2 + H_2$

Net Reaction:
$3CO + 3H_2 \rightleftharpoons CH_3OCH_3 + CO_2$

A recent development.

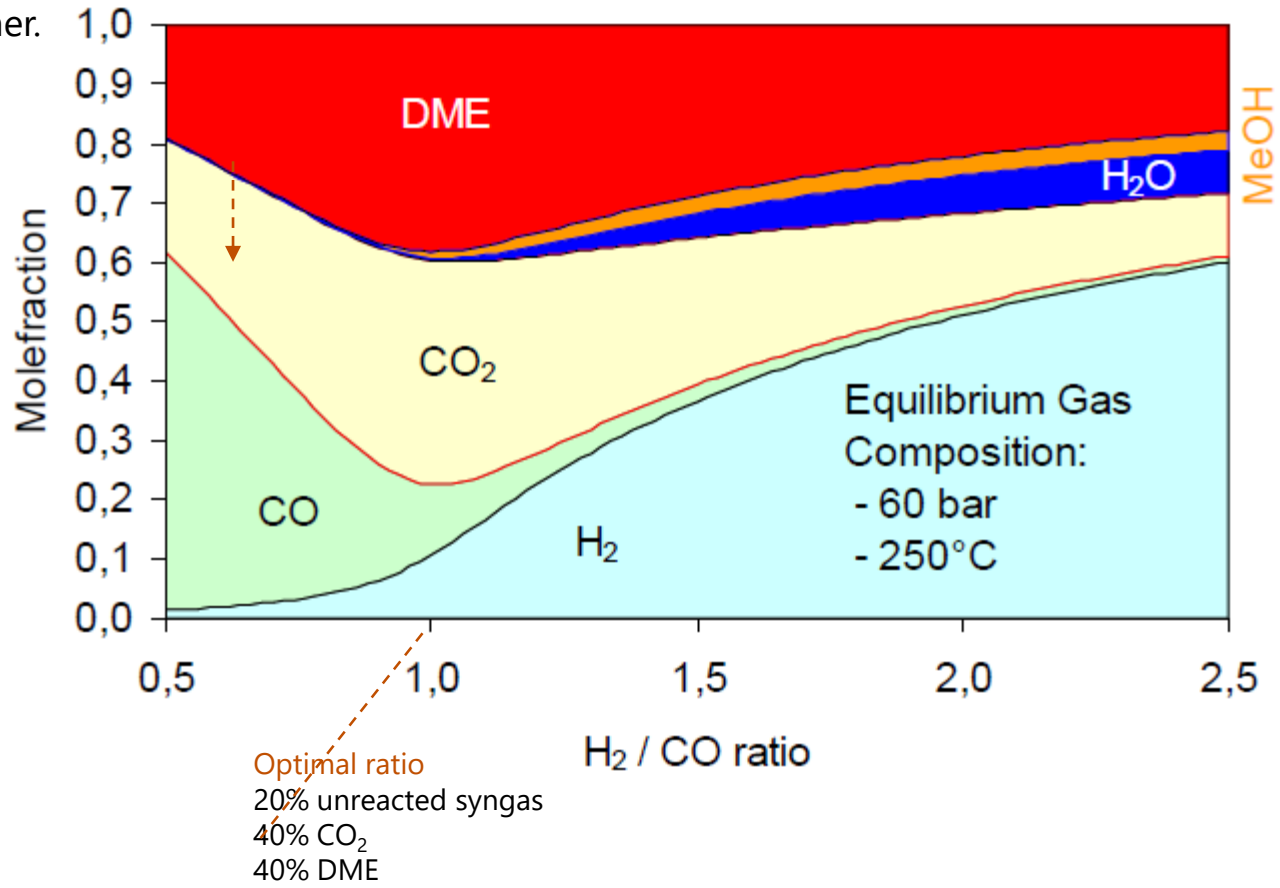

Sources: Haldor-Ropsoe "Gasoline-TIGAS" http://www.topsoe.com/business_areas/gasification_based/Processes/Gasoline_TIGAS.aspx
Topp-jorgensen et al. Integrated process offers lower gas-to-gasoline investment. Oil and Gas Journal, May 19, 1986
Polygeneration – Integration of Gasoline Synthesis and IGCC Power Production Using Topsoe's TIGAS Process
T.A. Semelsberger et al. / Journal of Power Sources 156 (2006) 497–511

Single-Step DME

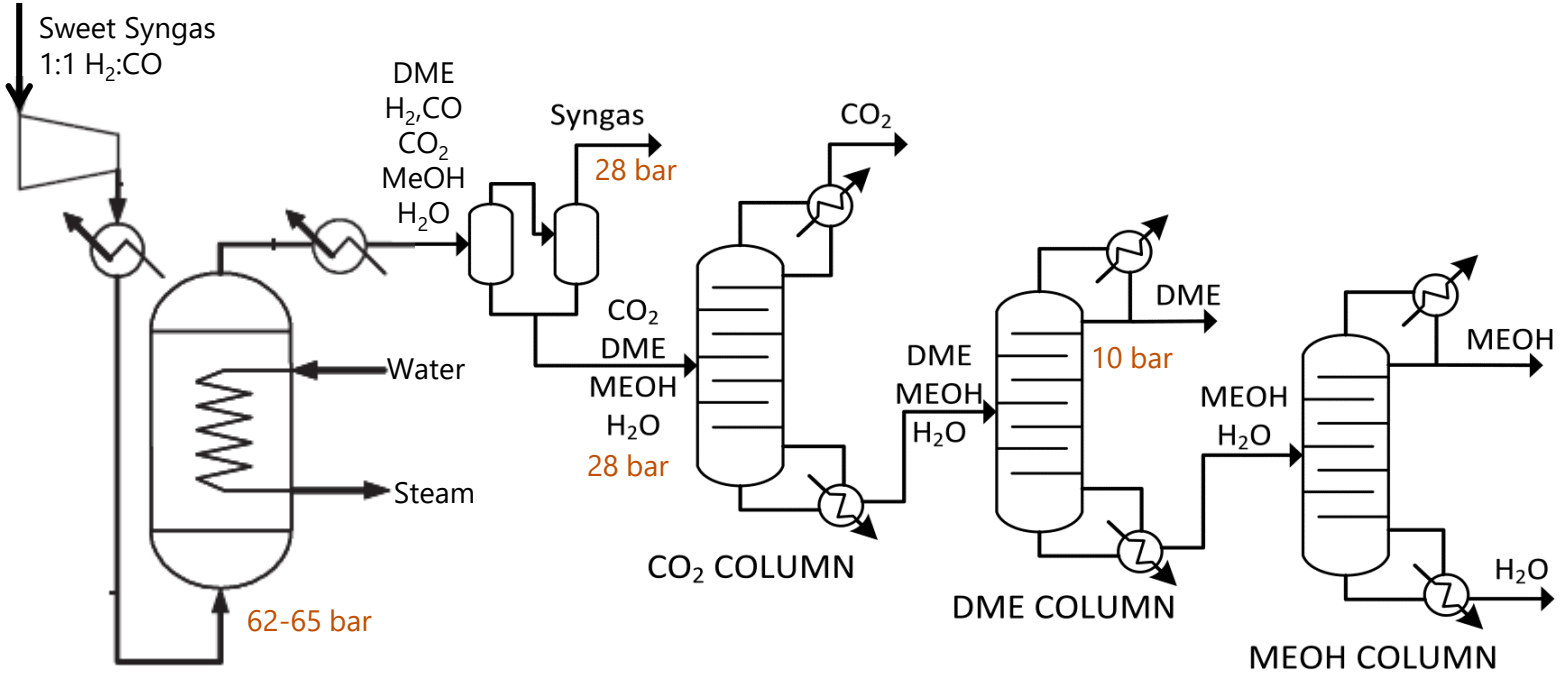

Net Reaction:

$3CO + 3H_2 \rightleftharpoons CH_3OCH_3 + CO_2$ (slightly exothermic)

So single-step produces 1 mole CO_2 per mole DME
two-step produces 1 mole H_2O per mole DME

Discussion: which is "better"?

McMaster University ENGINEERING

MACC McMaster Advanced Control Consortium

Sources: Pascall A, Adams TA II. Can J Chem Eng. 91:1001-1021 (2013).
E. D. Larson, H. Jin, and F. E. Celik, "Large-scale gasification-based coproduction of fuels and electricity from switchgrass," Biofuels, Bioproducts and Biorefining, vol. 3, no. 2, pp. 174-194, Mar. 2009

New Market for Mobile Technologies

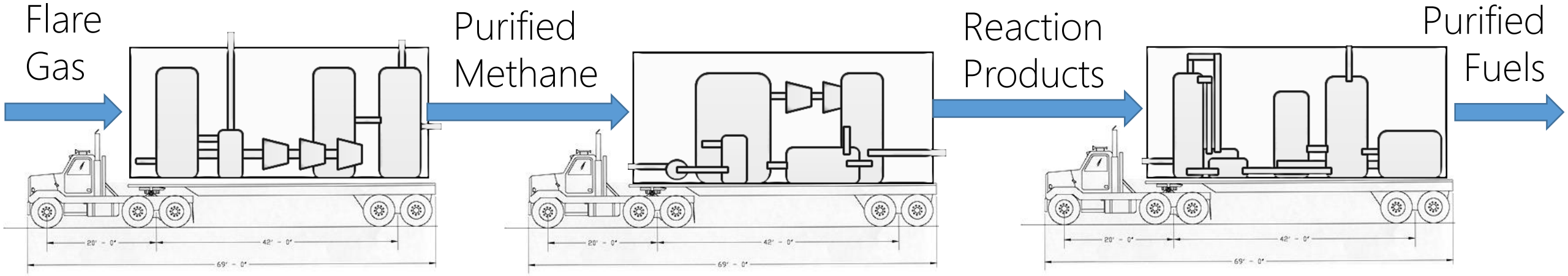

Gas Preparation

Reaction Module

Separation Module

Examples:
Flare Gas to Methane
Remote biomass gasification

Examples:
Methane to Methanol
Methane to Butanol
Syngas to Dimethyl Ether
Methane to H_2

Examples:
Distillation
Membranes
Natural Gas Liquids

Examples: Pioneer Energy

Sources: .Pioneerenergy.com

Semicontinuous Dividing Wall Distillat.

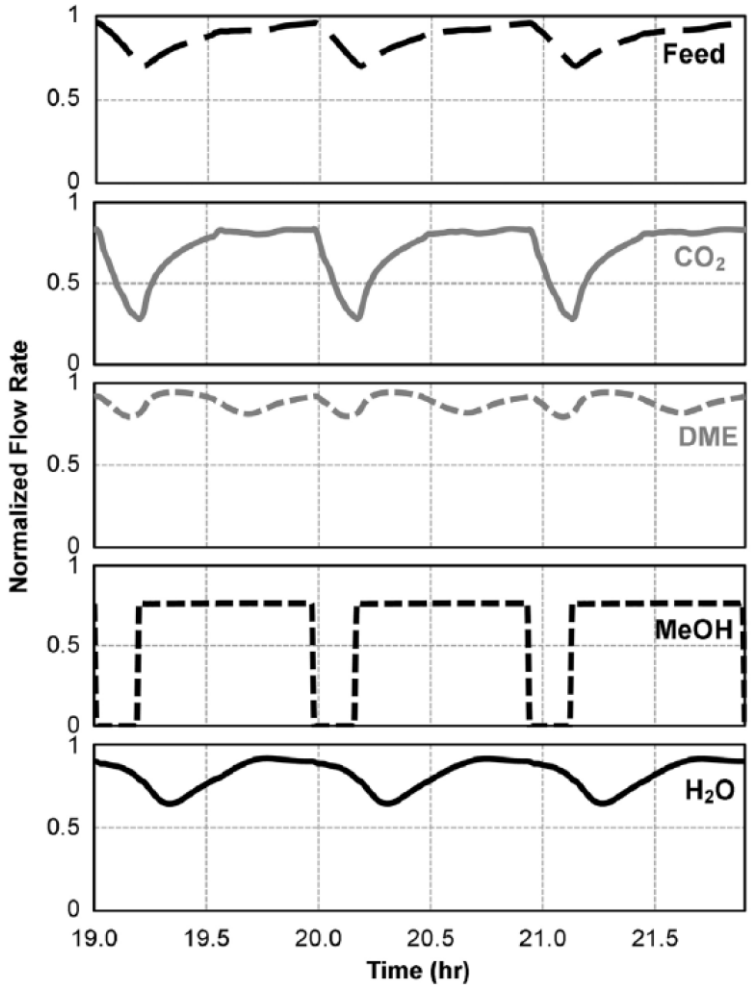

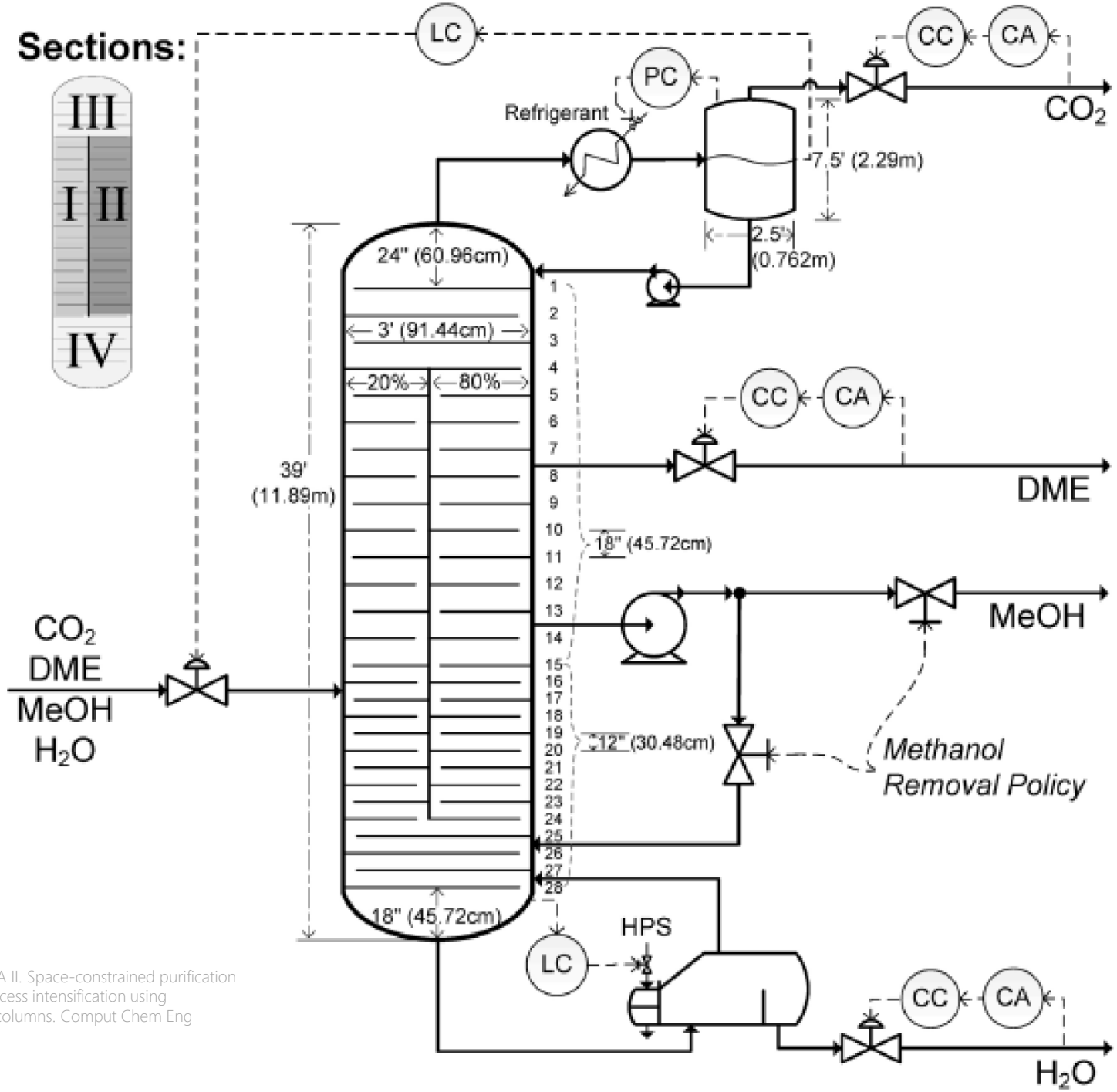

Sources: Ballinger S, Adams TA II. Space-constrained purification of dimethyl ether through process intensification using semicontinuous dividing wall columns. Comput Chem Eng 105:197-211 (2017).
US Patent Pending.

McMaster University ENGINEERING
MACC McMaster Advanced Control Consortium
mies McMaster Institute for Energy Studies

3. Methanol to gasoline

Another route to our addictive drug

Mobil's Methanol to Gasoline (MTG)

Methanol Dehydration – Same as methanol to DME just discussed (two step):

$2CH_3OH \rightleftharpoons CH_3OCH_3 + H_2O$

Parrafin Formation over Zeolite ZSM-5

$^1/_2 n\ CH_3OCH_3 \rightarrow C_nH_{2n}$ *(highly exothermic)*

Aromatic Formation over Zeolite ZSM-5

$C_nH_{2n} \rightarrow n[CH_2]$ (various aromatics with average CH_2) *(highly exothermic)*

Shifts toward aromatics the longer the residence time…

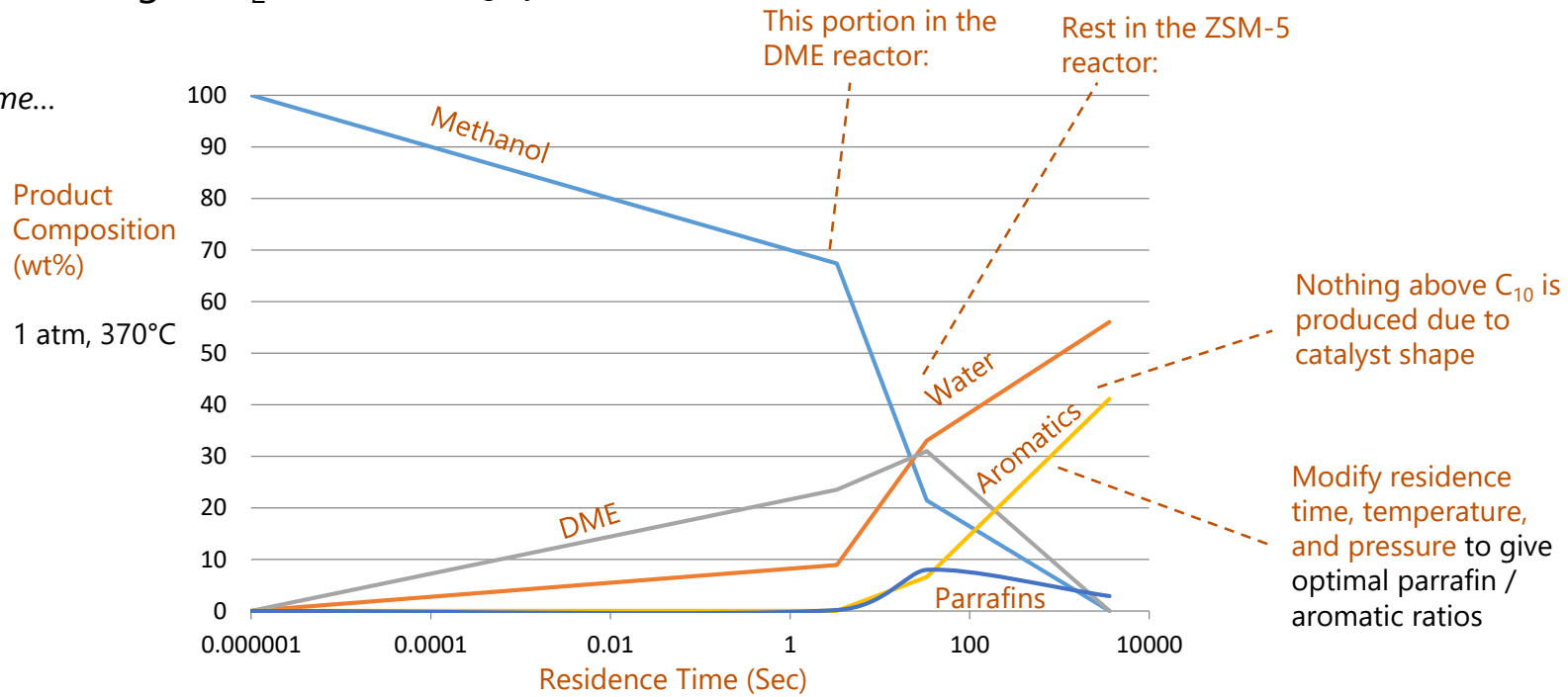

Sources: Change CD. Catalysis Today, 13, 103-111 (1992).

McMaster University ENGINEERING

MACC McMaster Advanced Control Consortium

MTG Process in New Zealand

Produced from
natural gas →syngas → methanol

DME Synthesis
(essentially the two stage approach)

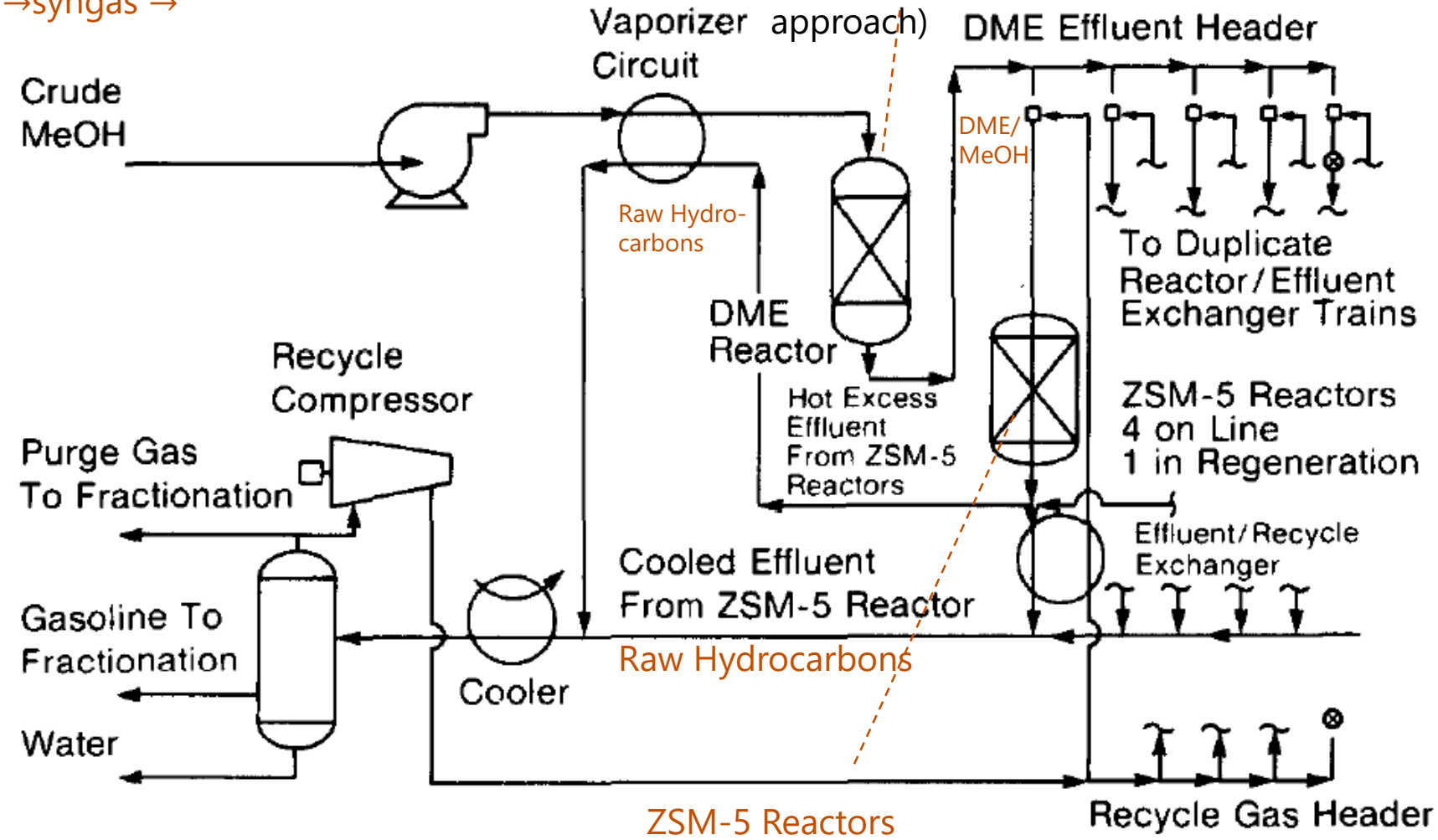

ZSM-5 Reactors
Convert DME to hydrocarbons

Sources: Change CD. Catalysis Today, 13, 103-111 (1992).

McMaster University ENGINEERING
MACC McMaster Advanced Control Consortium

Product Quality

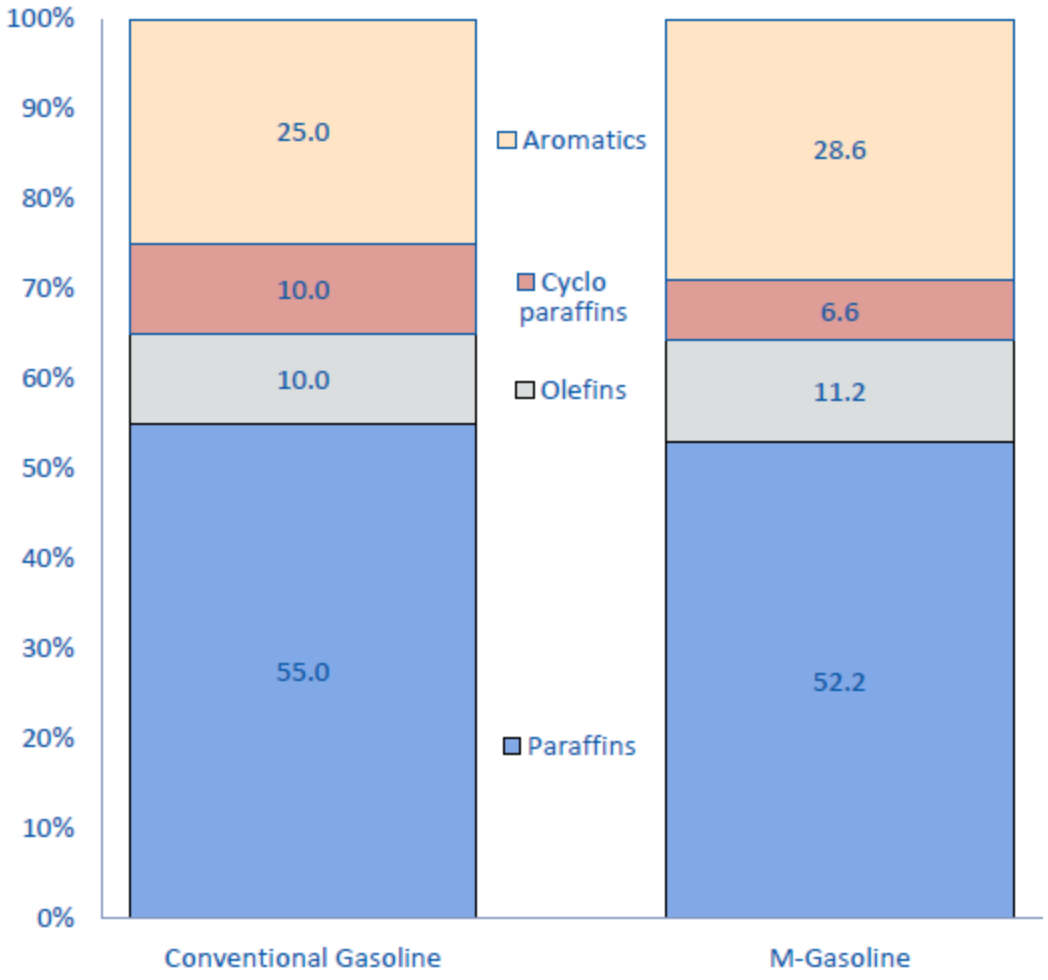

Methanol-derived gasoline is very similar to conventional gasoline

Sources: National Renewable Energy Laboratory. "Technoeconomic comparison of biofuels: ethanol, methanol, and gasoline from gasification of woody residues"

TIGAS - Topsoe's Integrated Gasoline

- Built on one-step DME synthesis technologies
- Basically Mobil's MTG process with one step DME synthesis instead of two.
- Demonstration stage only (Houston, TX)

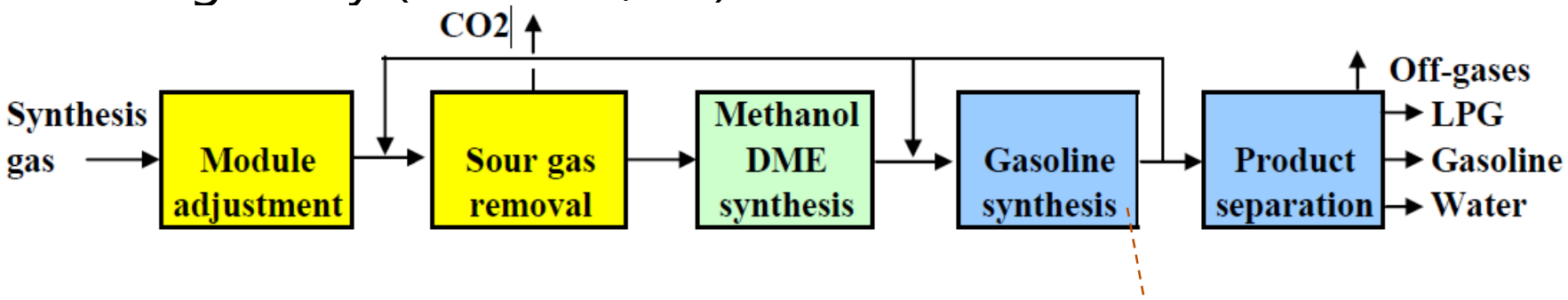

Basically a nathpha, lighter hydrocarbon blend

$$CO + 2\,H_2 \rightarrow CH_3OH$$

$$2\,CH_3OH \rightarrow CH_3OCH_3 + H_2O$$

Catalyst promotes rapid methanol→DME synthesis
Methanol exists for a short time

$$CO + H_2O \rightarrow CO_2 + H_2$$

$$CH_3OCH_3 \rightarrow 2\,\text{-}CH_2\text{-} + H_2O$$

DME → alkyl chains in separate step

Sources: Haldor-Topsoe "Gasoline-TIGAS" http://www.topsoe.com/business_areas/gasification_based/Processes/Gasoline_TIGAS.aspx
Topp-jorgensen et al. Integrated process offers lower gas-to-gasoline investment. Oil and Gas Journal, May 19, 1986
Polygeneration – Integration of Gasoline Synthesis and IGCC Power Production Using Topsoe's TIGAS Process