# Chemical Looping

## Metal Oxygen Carriers

**Thomas A. Adams II**
**McMaster University**
Department of Chemical Engineering
McMaster Advanced Control Consortium
McMaster Institute for Energy Studies

**Lecture 4.4 – 2018 Edition**

# 1. Basic concepts

## Metal oxide loops

# Concept: Use Metal as O carrier

"Carrier" Form
(Vastly oversimplified)

Easily Separable Products

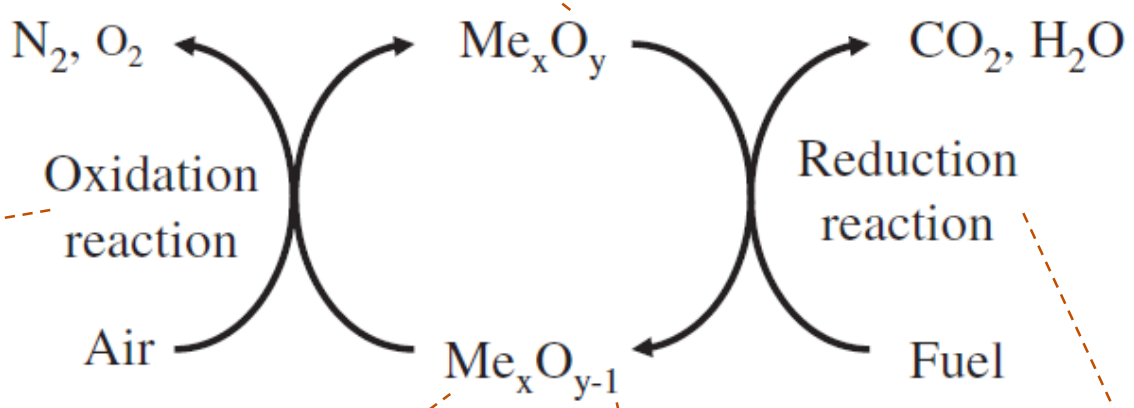


Example:
$3Fe + 2O_2 \rightarrow Fe_3O_4$

(Also Fuel Oxidation)
Example:
$Fe_3O_4 + CH_4 \rightarrow 3Fe + CO_2 + 2H_2O$

Can be a variety of metals

| | |
|---|---|
| Al | Aluminium |
| Ca | Calcium |
| Co | Cobalt |
| Cu | Copper |
| Fe | Iron |
| Mn | Manganese |
| Ni | Nickel |

"Reduced" Form
(Vastly oversimplified)
Can be more than one O at a time

McMaster University ENGINEERING

MACC McMaster Advanced Control Consortium

Sources: J. Adanez et al. / Progress in Energy and Combustion Science 38 (2012) 215-282.
also CC Cormos, Evaluation of syngas-based chemical looping applications for hydrogen and power co-generation with CCS. Int J Hydrogen Energy (2012) in press.

# Common Reactor Types

**Circulating Fluidized Bed**
Most common

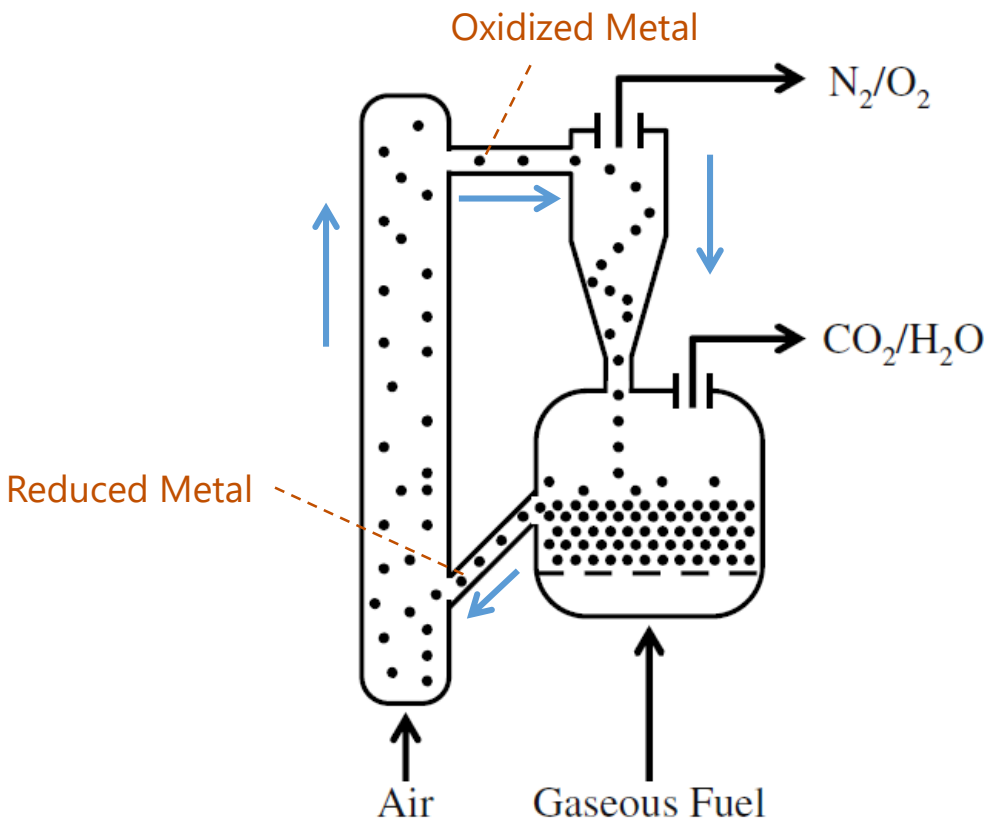


**Alternating Packed Beds**
Alternate between two reactors in parallel

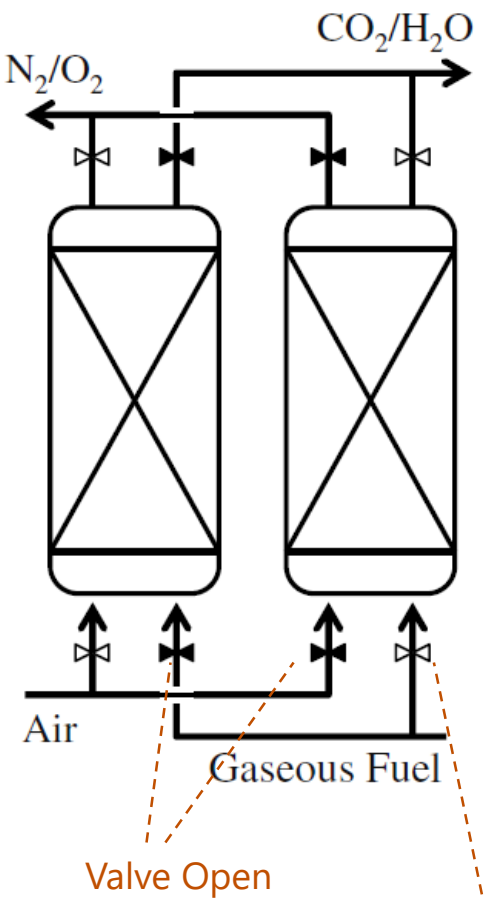


**Rotating Reactor Bed**
Eliminates wastage,
Reactor underuse
Not practical above 20 MW

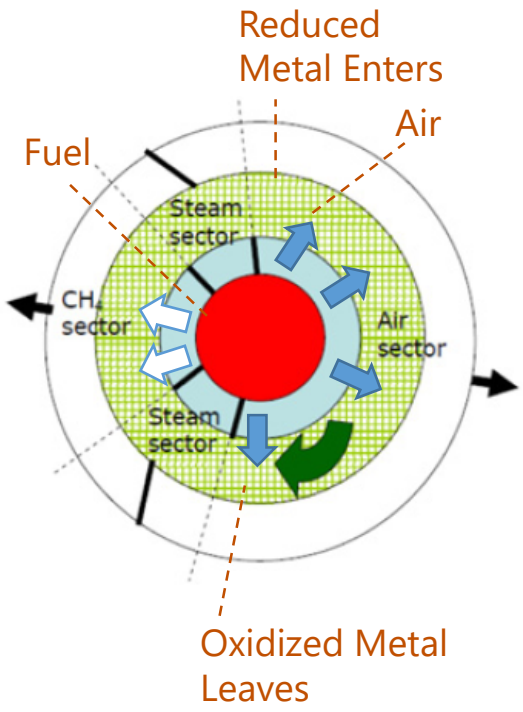


Source: J. Adanez et al. / Progress in Energy and Combustion Science 38 (2012) 215-282

# Aside: Rotating vs Alternating Bed (2)

Blue is the location of the oxidized metals

Fuel should be completely oxidized!

Have to stop "early"
Need ample O concentration, residence time

OK Here to have excess air if needed

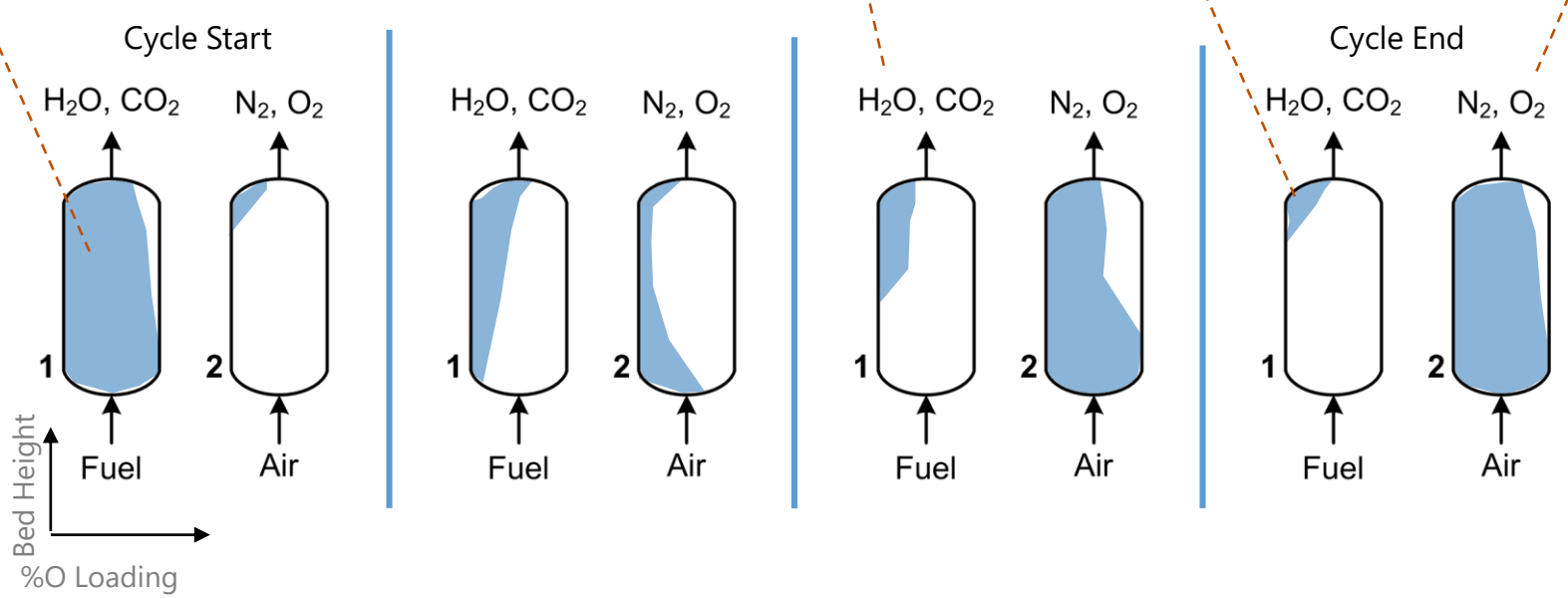


In a rotating bed, all fixed solids see the same interactions with fuels and oxidants

Consistent and uniform.

BUT too hard to pull off when big…

McMaster University ENGINEERING

MACC McMaster Advanced Control Consortium

# Aside: Simulated Moving Beds

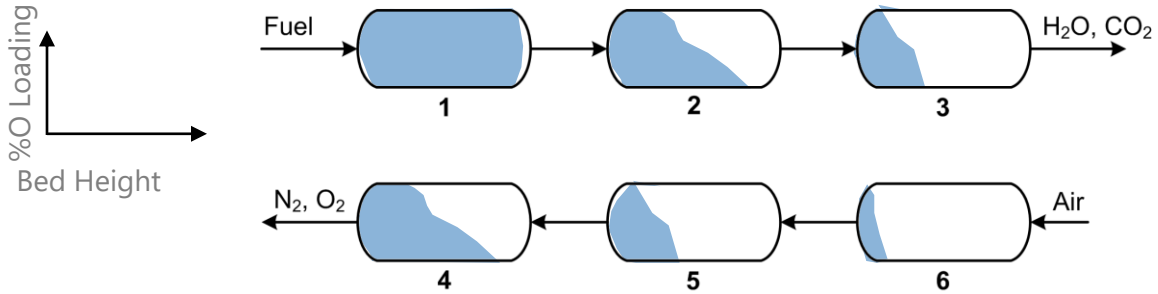


Rather than giant rotating wheels, use a collection of many beds and rotate the FEEDS.

Air regeneration always fed place of greatest need

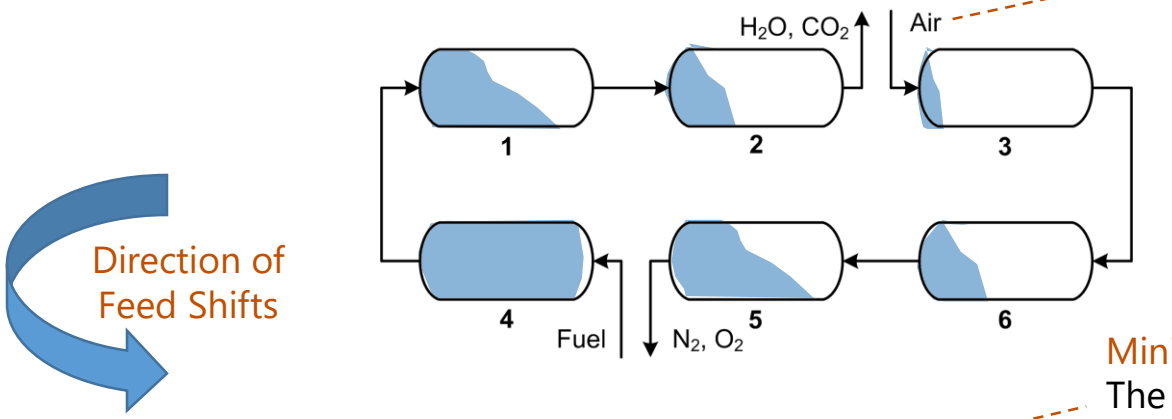


Minimizes Unused Solids
The more stages, the less waste.

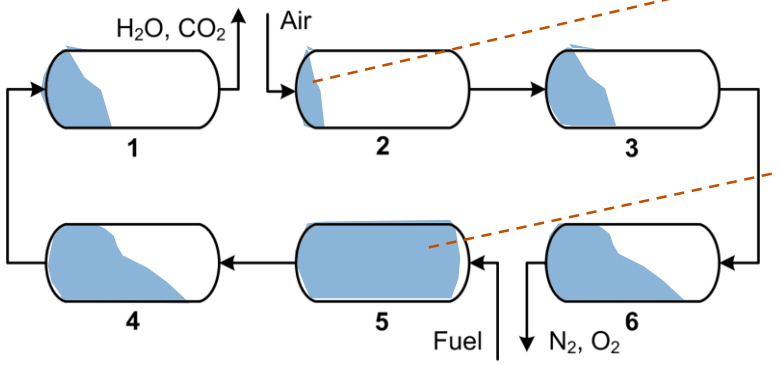


Fuel always fed to region of largest oxygen loading

McMaster University ENGINEERING
MACC McMaster Advanced Control Consortium

Source: Sudiro et al. Chemical Engineering Research and Design 88 (2010) 465–475

OK Back to Business…

# Choice of Metal Oxide Carrier

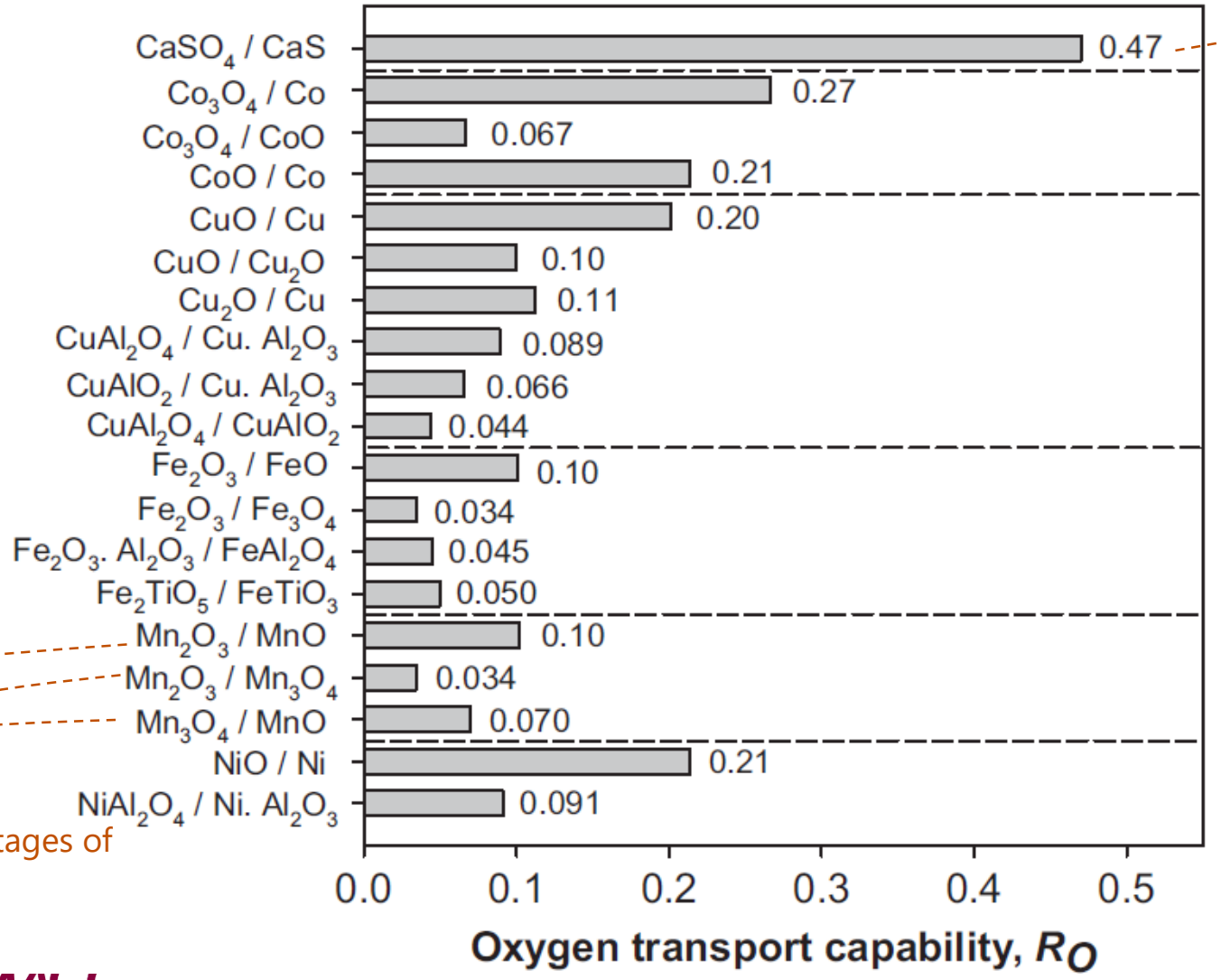


$$R_O = \frac{Mass\ Oxygen\ Delivered}{Mass\ of\ Oxidized\ Metal}$$

Can use different stages of the redox cycle.

But there are other factors:

- Rates of reaction (Difficulty of Regeneration)
- Practical temperatures
- Useable lifetimes
- Cost
- Side reactions (carbon deposition, etc.)
- Transportability
- Sustainability & Life Cycle Analysis

McMaster University ENGINEERING

MACC McMaster Advanced Control Consortium

Source: J. Adanez et al. / Progress in Energy and Combustion Science 38 (2012) 215-282

# Solid Losses

- Solids need to be replenished due to:
  - Agglomeration, clumping → fluidization breakdown
  - blow-away (are blown into the fuel stream and lost)

Support Materials (help form the best shape for the O carrier, don't participate in reactions)

More Expensive, Pre-treatment

| Carrier | Fuel Reaction Temperature (°C) | Air Reaction Temperature (°C) | Lifetime |
|---|---|---|---|
| $NiO / Al_2O_3$ | 900 | 1000 | 4.5 years |
| $NiO / NiAl_2O_4$ | 940 | 1000 | 6 months |
| $CuO / Al_2O_3$ | 800 | 800 | 3 months |
| $CuO / NiO\text{-}Al_2O_3$ | 900 | 950 | 3 months |
| Iron Ore | 950 | 1100 | 2 months |

Relatively cheap

McMaster University ENGINEERING

MACC McMaster Advanced Control Consortium

Source: J. Adanez et al. / Progress in Energy and Combustion Science 38 (2012) 215-282

# 2. Processes using Chemical Looping

Power and others

# CLC: General Fuel Oxidizer

Heat from oxidation allows extra power recovery via Brayton cycle

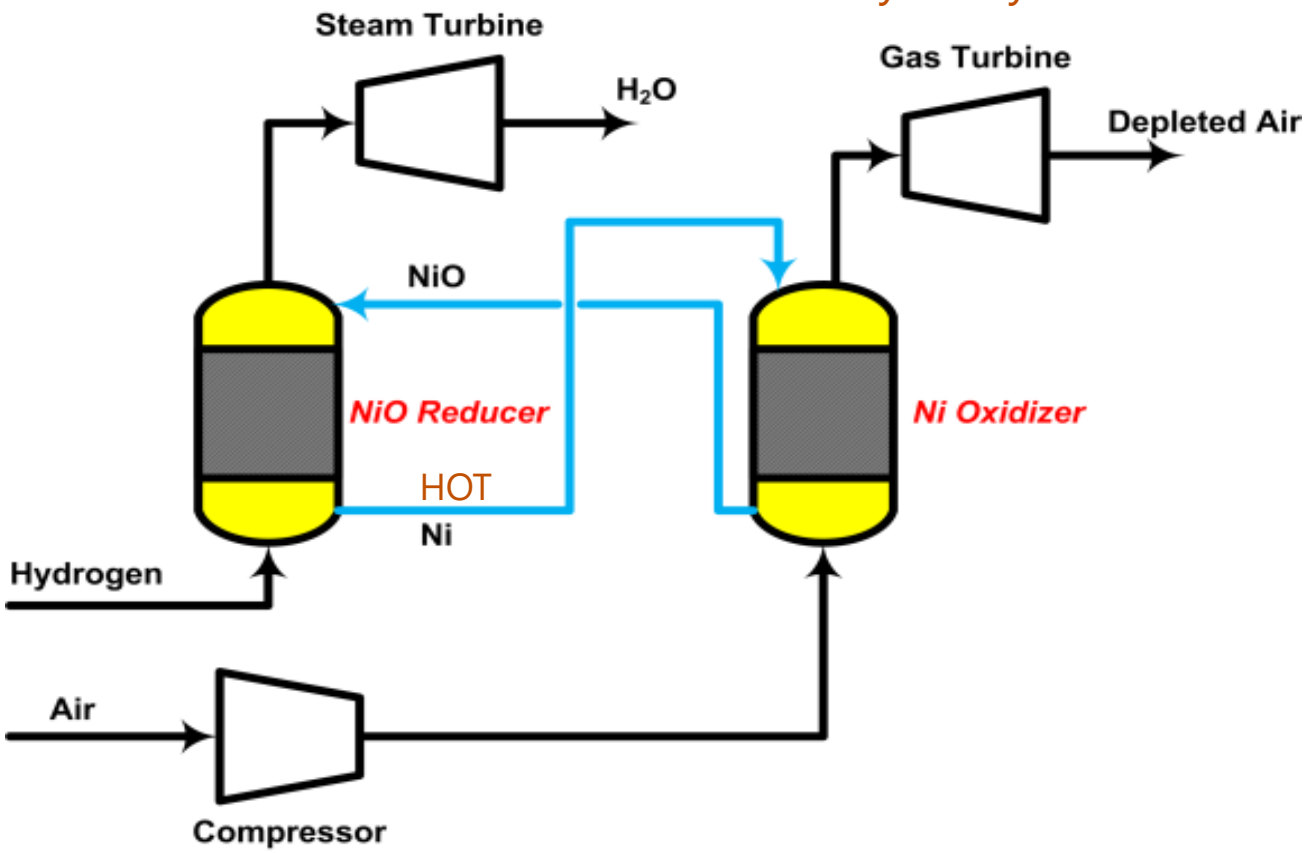


This is a different way of providing oxygen to a fuel

But where are we going to get this hydrogen?

Is that really the best use of this technology?



Source: H. Jin, M. Ishida, A novel gas turbine cycle with hydrogen-fueled chemical-looping combustion, International Journal of Hydrogen Energy, 25 (2000) 1209-1215.
Image: Yaser Khojestah Salkuyeh

# Chemical Looping Combustion (NiO)

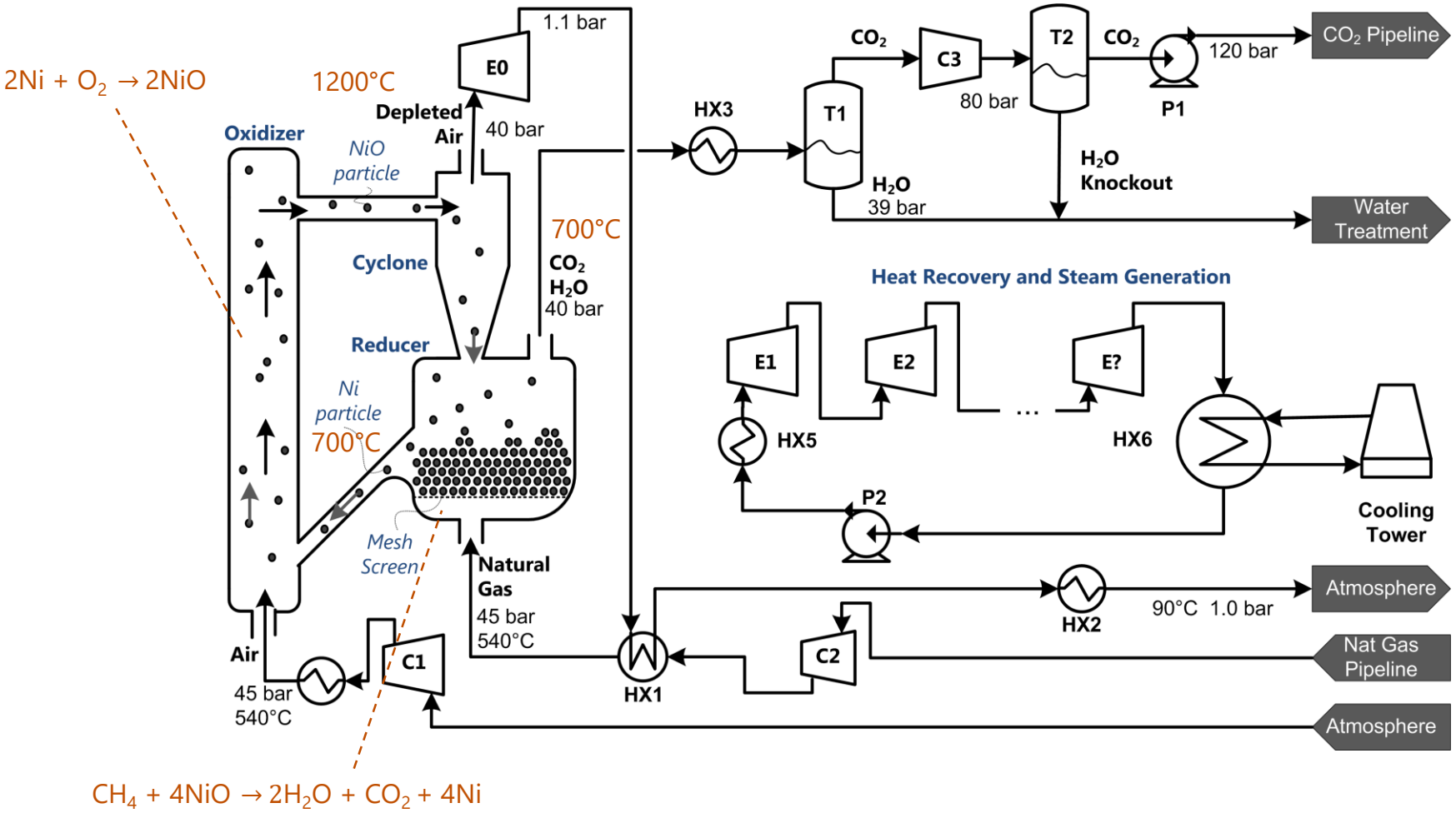


Source: Portions of flowsheet from J. Adanez et al. / Progress in Energy and Combustion Science 38 (2012) 215-282

# From Direct Solids (like Oxyfuels)

Coal reacts with $O_2$ not MeO

$O_2$ released from MeO indirectly

$CO_2$ used as carrier gas

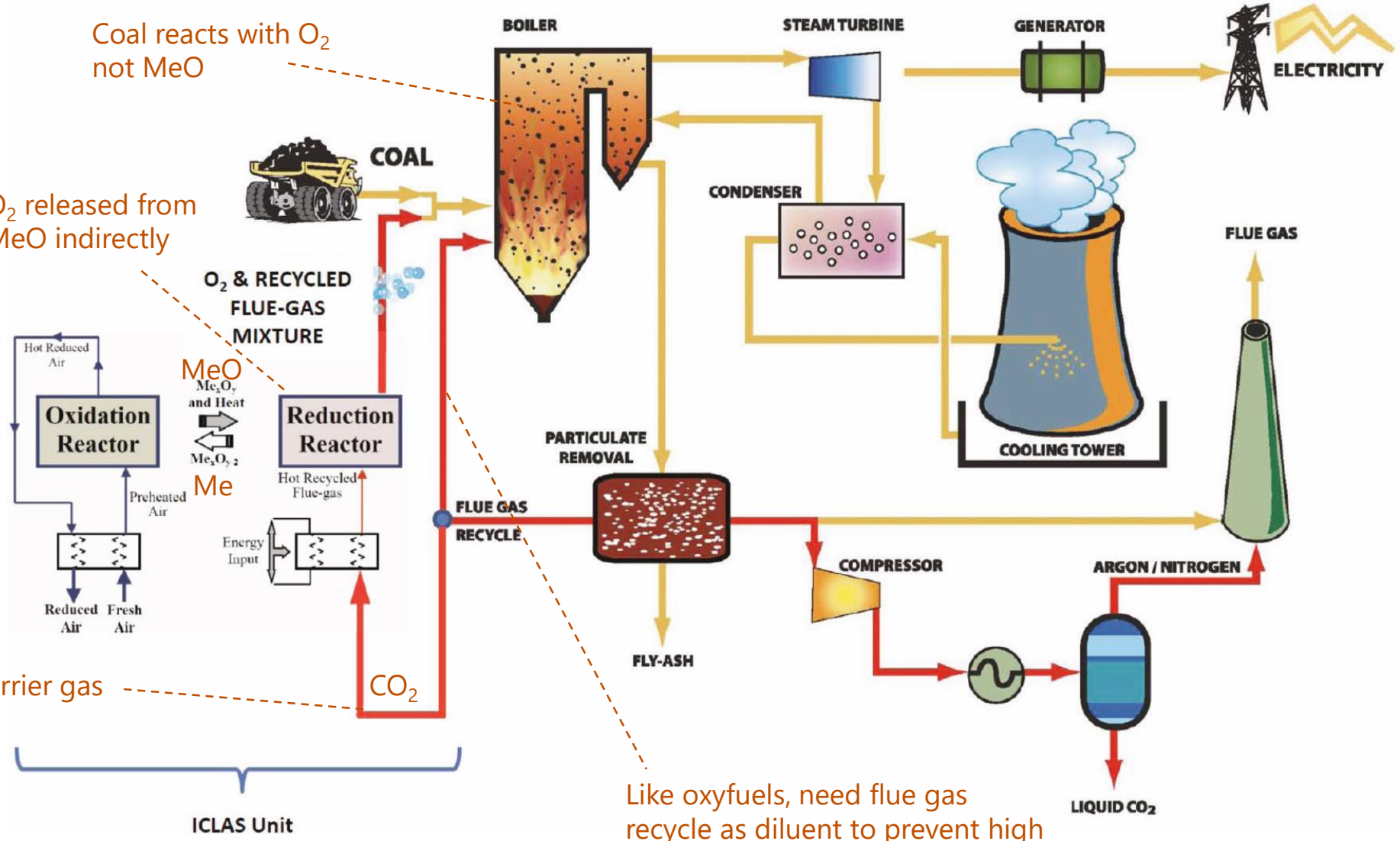


Like oxyfuels, need flue gas recycle as diluent to prevent high temperatures

Source: Moghtaderi B. Energy Fuels 2012, 26, 15–40

McMaster University ENGINEERING

MACC McMaster Advanced Control Consortium

# Co-generation of Hydrogen and Electricity

Three oxidation states of iron

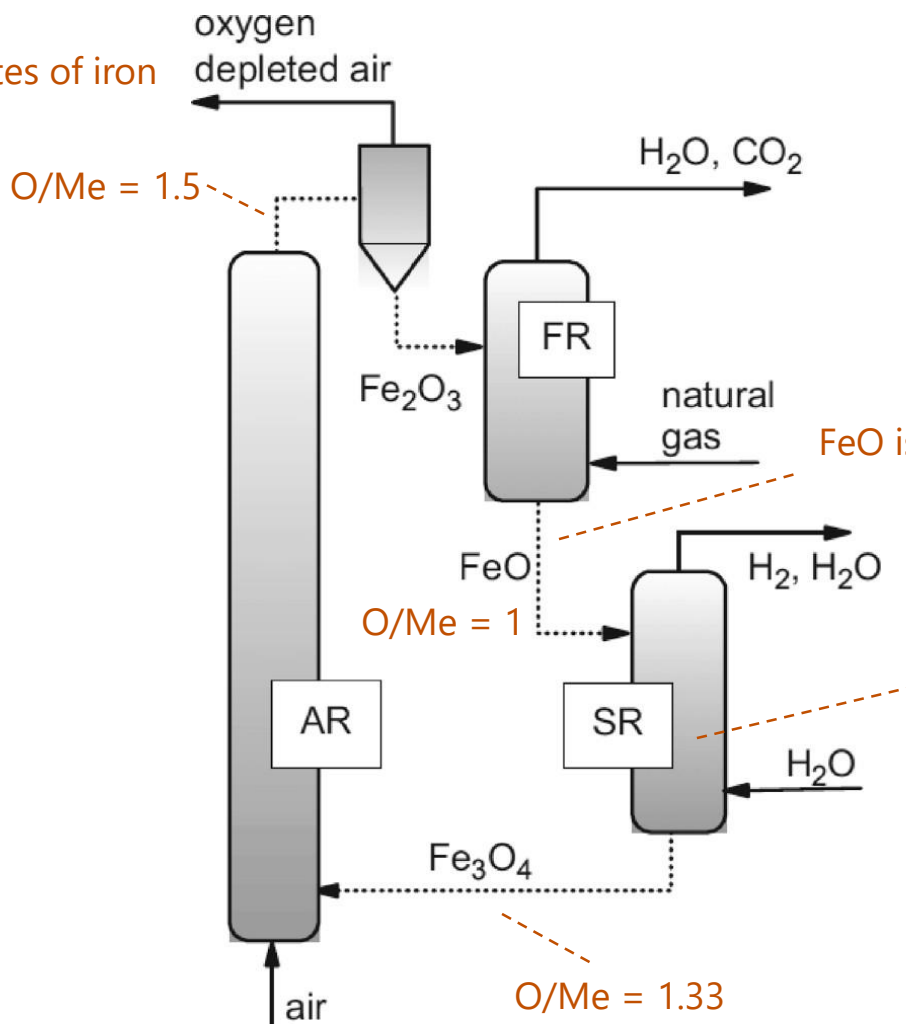


FeO is heat carrier

$H_2$ / $H_2O$ easily separated
Or combust for power

Steam Reforming is highly endothermic
$3FeO + H_2O \rightarrow Fe_3O_4 + H_2$

Source: Moghtaderi B. Energy Fuels 2012, 26, 15–40

# Steam Reforming Route from Coal Syngas

This has been successfully demonstrated.

$H_2$ plus waste electricity

All high pressure (30+ bar)

$Fe_2O_3 + CO/H_2 \rightarrow 2FeO + H_2O/CO_2$

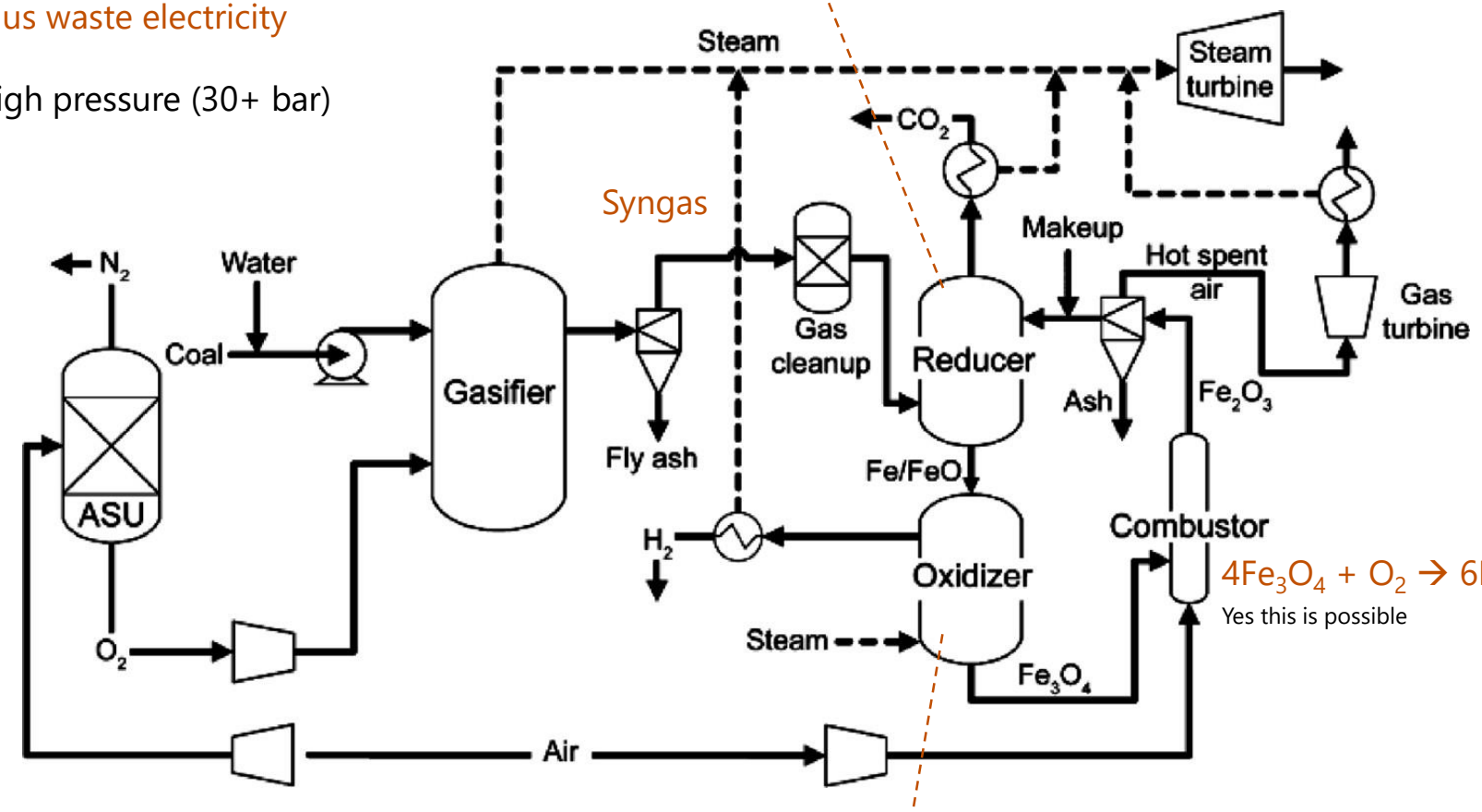


$4Fe_3O_4 + O_2 \rightarrow 6Fe_2O_3$

Yes this is possible

$3FeO + H_2O \rightarrow Fe_3O_4 + H_2$

Source: Moghtaderi B. Energy Fuels 2012, 26, 15–40
CC Cormos, Int J Hydrogen Energy, 2012, in press

McMaster University ENGINEERING

MACC McMaster Advanced Control Consortium

# Gasify Coal with Chemical Looping

We don't necessarily have to oxidize the syngas here

Hard to directly contact metal oxide with coal (slow, solid contact issues)

The heat from the metal oxidation powers the gasifier (Proposed, not yet built)

Water is used as the oxidant! Need a lot of water, plus need a lot of outside heat.

25 kW demo currently on line

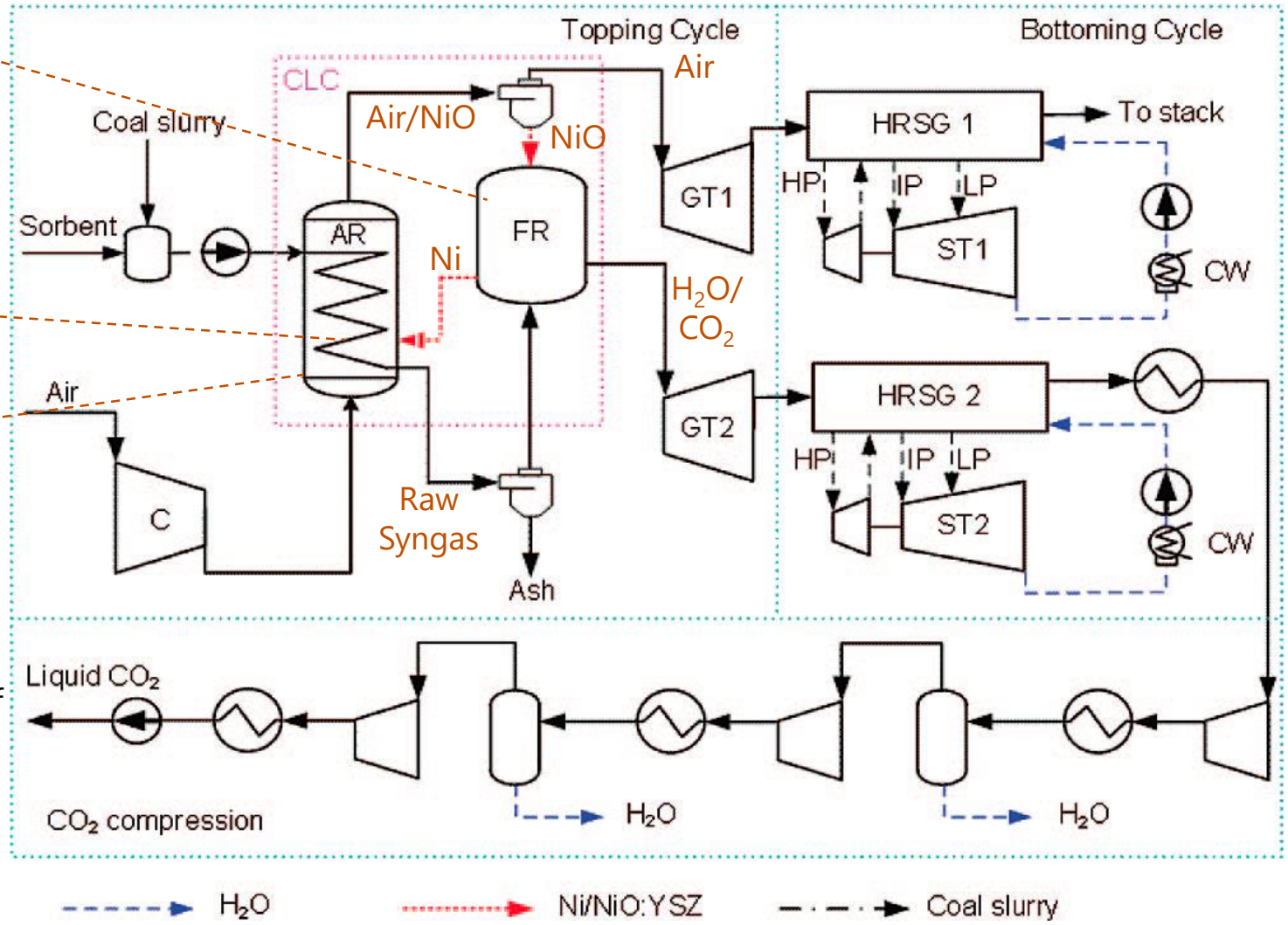


Source: Xiang et al. Energy & Fuels, Vol. 22, No. 2, 2008
Tong A, Bayham S, Kathe MV, Zeng L, Luo S, Fan L-S. *App Energy* 2013, in press, doi: 10.1016/j.apenergy.2013.05.024

McMaster University ENGINEERING

MACC McMaster Advanced Control Consortium

# Process Retrofitting from PC

Just partially oxidize (smaller looping system)

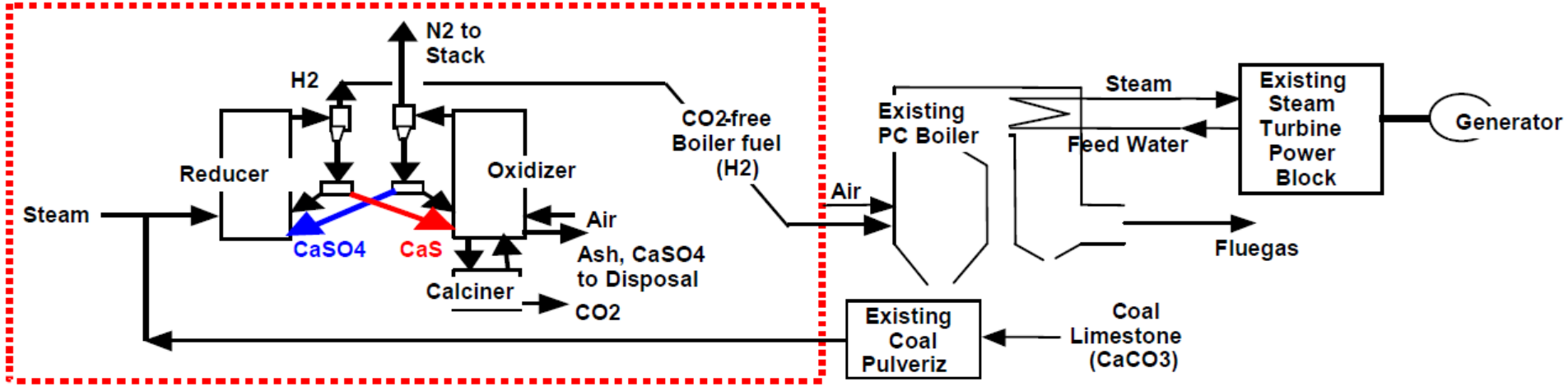


Concept 1 – Chemical Looping CO2 -Free Fuel; Minimum Boiler Modification

Retrofitting can be very attractive to a struggling industry. New greenfield can be very risky.

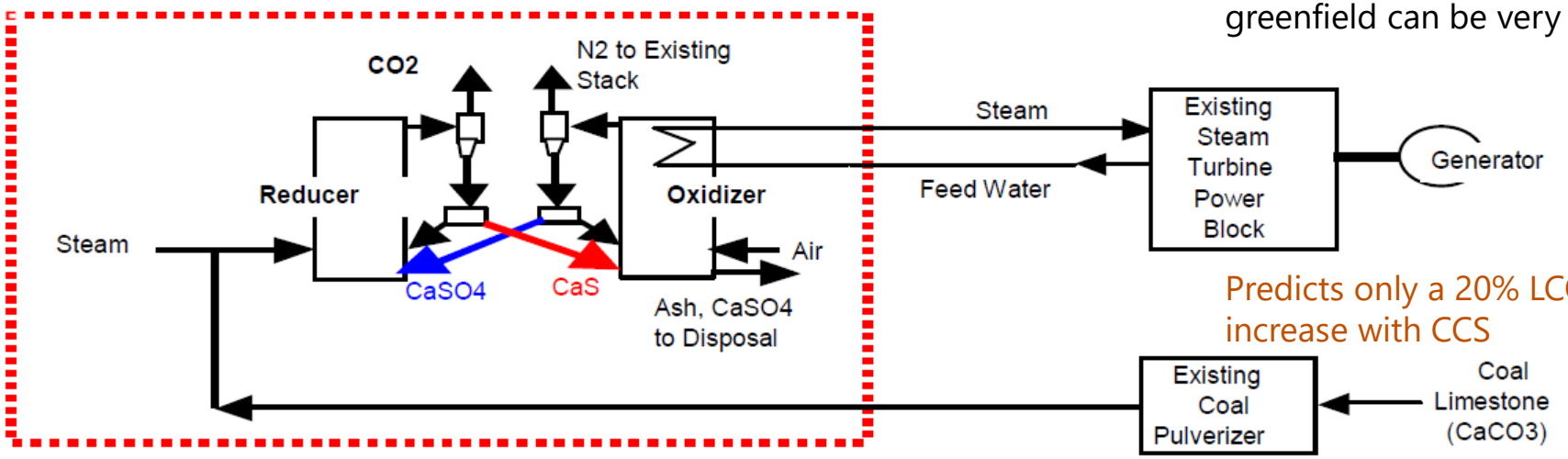


Predicts only a 20% LCOE increase with CCS

Concept 2 – Chemical Loopi ng Oxidizer Replaces Boiler

Source: Andrus HE et al. Alston's calcium oxide chemical looping combustion coal power technology development. *Int Tech Conf Clean Coal & Fuel Sys* (2009).

McMaster University ENGINEERING

McMaster Advance

# 3. Costs and state

Where we are

# Current development stage

850 h

25 kW, Ohio State (2013)
Syngas chemical looping to $H_2$

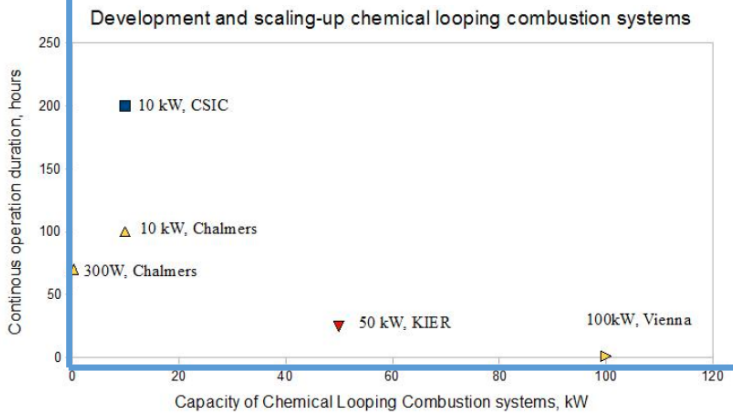


250 kW, US DOE (Proposed)
Syngas chemical looping to $H_2$

McMaster University ENGINEERING

MACC McMaster Advanced Control Consortium

Source: Wall T et al. Chemical looping combustion and CO2 capture: Status and developments . *Cooperative research centre for coal in sustainable development.* (2008)
Tong A, Bayham S, Kathe MV, Zeng L, Luo S, Fan L-S. *App Energy* 2013, in press, doi: 10.1016/j.apenergy.2013.05.024

# Efficiencies

This information is somewhat biased (and older)… from a particular developing selling this product.

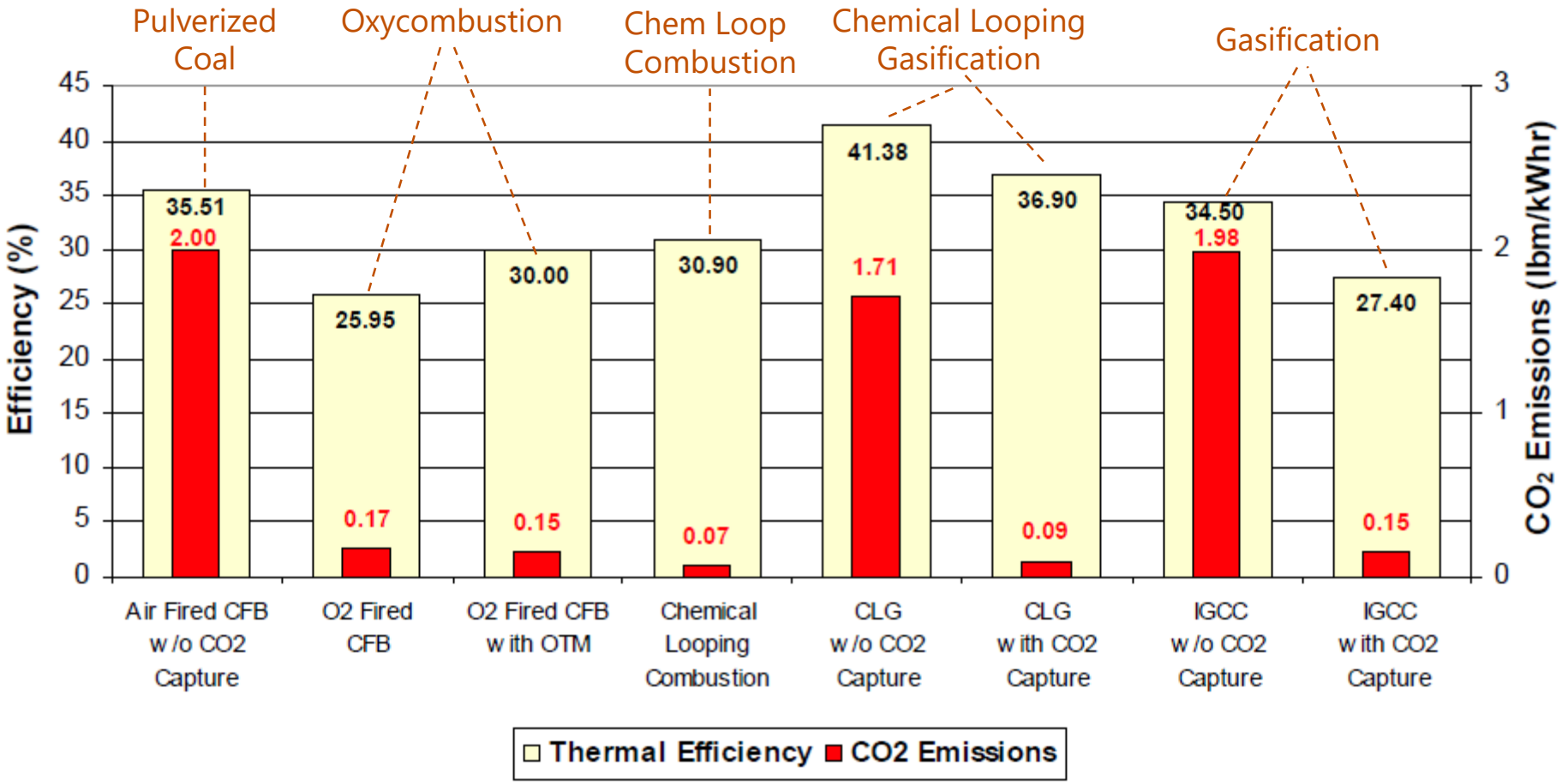


Source: Turek DG et al. Alson's development of advanced CFB-based technologies for CO2 mitigation. *4th Ann Conf Carbon Sequest.* (2005)

# LCOE

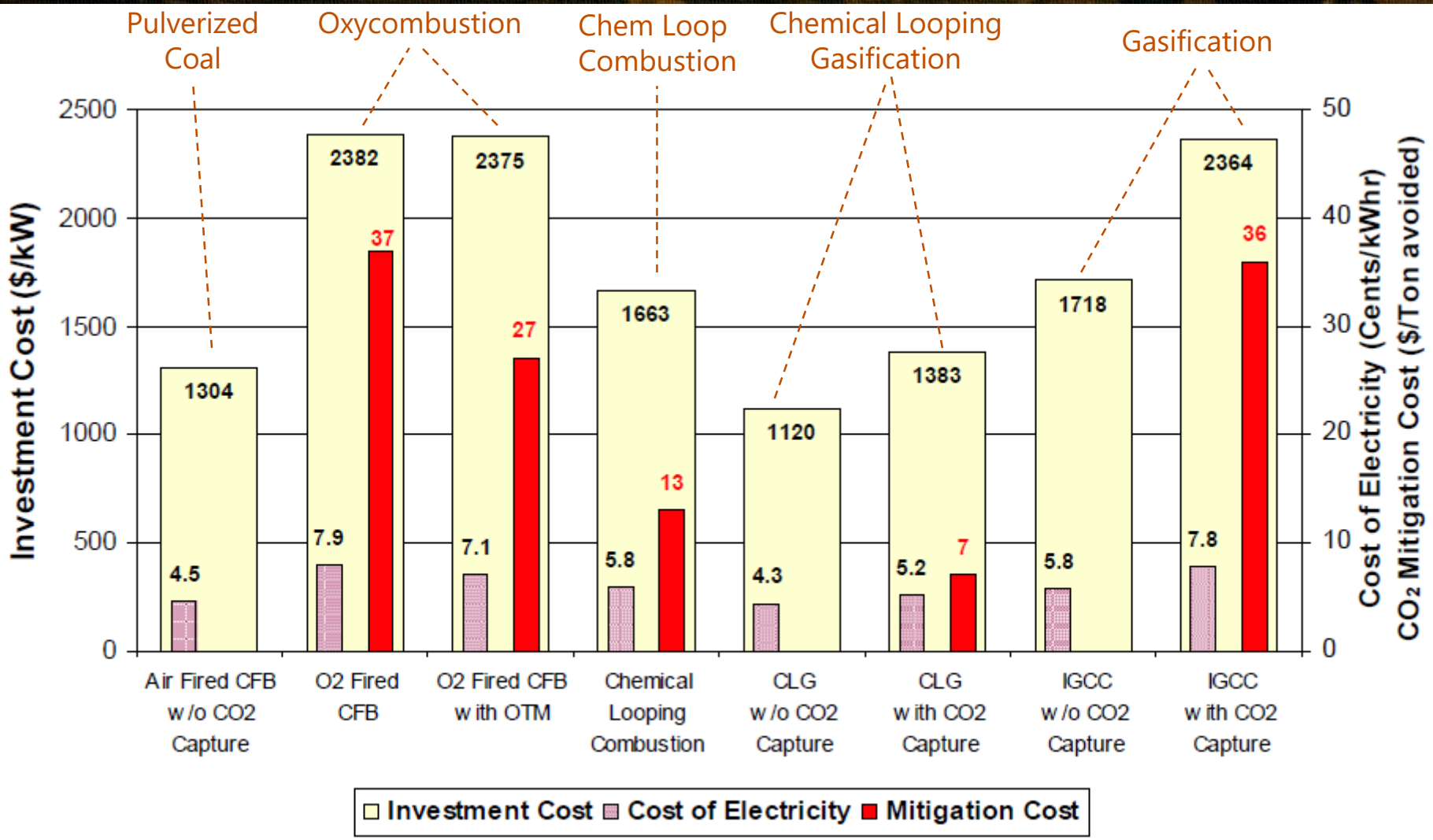


Source: Turek DG et al. Alson's development of advanced CFB-based technologies for CO2 mitigation. *4th Ann Conf Carbon Sequest.* (2005)

# LCA

- Almost nothing done!!! (That I can find, I tried)
- best I can find, and this is not completely cradle to gate and uses an outdated method:

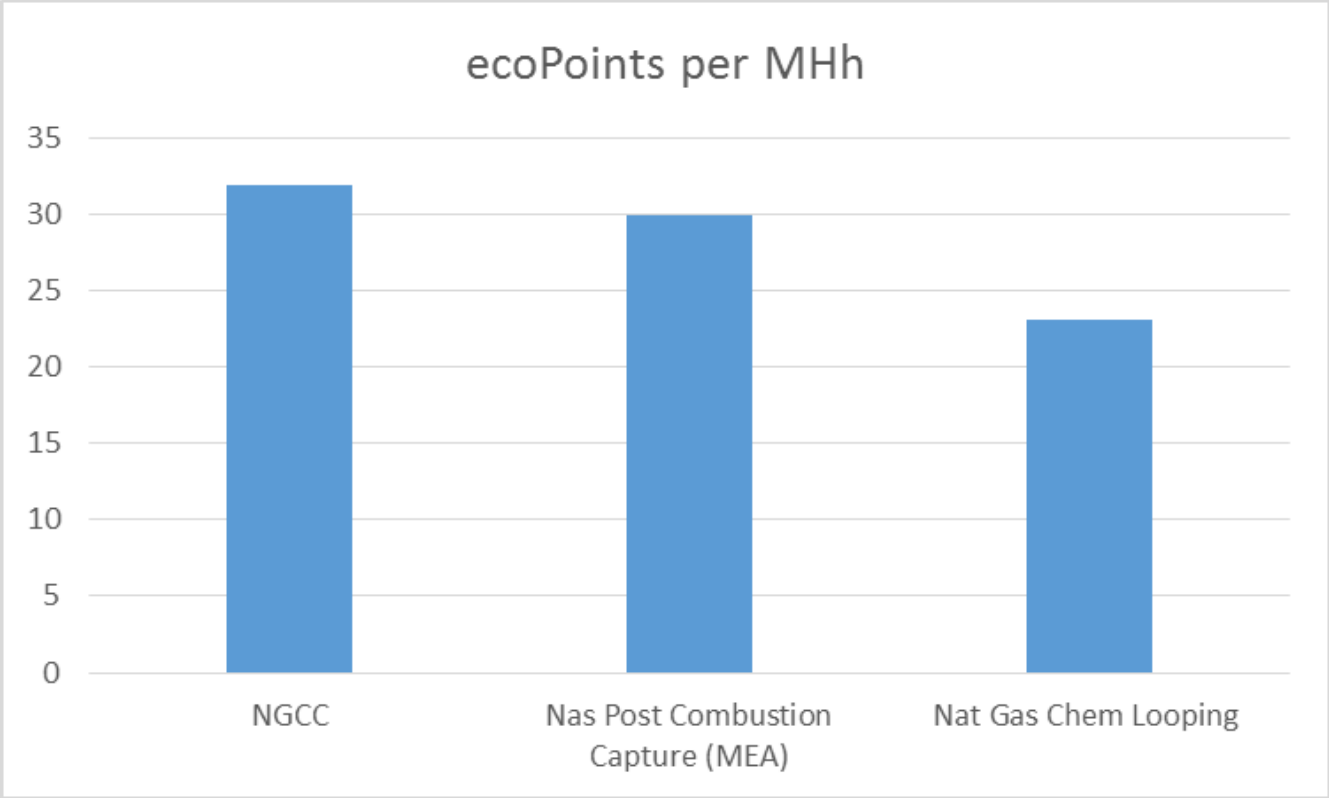


Source: Petrakopoulou F, et al. Exergoeconomic and exergoenvironmental evaluation of power plants including CO2 capture. *Chem Eng Res Des* 89:1461-1469 (2011).

# Our own results

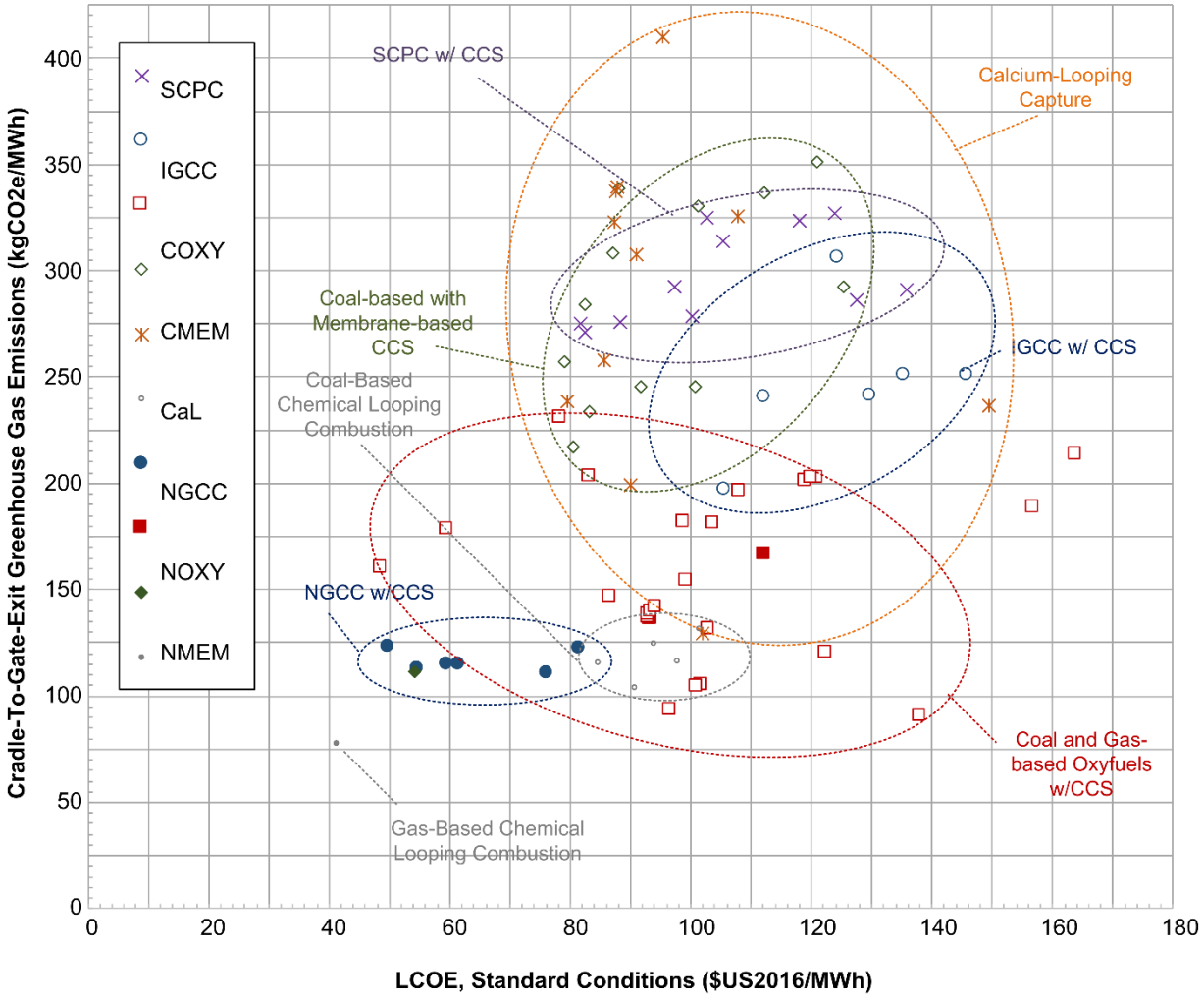


Source: Adams TA II, Hoseinzade L, Madabhushi P, Okeke IJ. Processes 5:44 (2017).