Investigation on the Injection Pattern of Intermittent Natural Gas Flooding in Ultra-Low Permeability Reservoirs

Authors:

Lifei Dong, Linxiang Li, Wenzhuo Dong, Miao Wang, Xiaozhi Chen

Date Submitted: 2023-02-20

Keywords: enhanced oil recovery, intermittent natural gas injection, ultra-low-permeability reservoir, cycle time, cycle index

Abstract:

Natural gas is a viable oil displacement agent in ultra-low-permeability reservoirs due to its good fluidity. It can also cause gas channeling during continuous injection, which limits its oilfield application. In order to relieve gas channeling during natural gas flooding, the injection mode should be changed. The use of intermittent natural gas injection (IGI) after the continuous natural gas injection in an ultra-low-permeability reservoir is proposed, and optimization of the injection parameters is discussed. The results show that IGI can be divided into three stages, the gas injection stage, the well shutting stage and the oil production stage. With the increase in injection time, the oil recovery enhances obviously as a result of IGI because the gas fingering can be controlled at the well shutting stage, and the gas/liquid ratio grows slowly because the gas breakthrough can be reduced at the oil production stage. The oil recovery improves with the increase in cycle time of IGI, while the increase rate reduces evidently after the cycle time reaches 360 min. The oil recovery increment is low if the cycle index exceeds 3 in the ultra-low-permeability reservoir. Thus, the optimal cycle time for each round and the appropriate cycle index of IGI are 360 min and three rounds.

Record Type: Published Article

Submitted To: LAPSE (Living Archive for Process Systems Engineering)

Citation (overall record, always the latest version):	LAPSE:2023.0716
Citation (this specific file, latest version):	LAPSE:2023.0716-1
Citation (this specific file, this version):	LAPSE:2023.0716-1v1

DOI of Published Version: https://doi.org/10.3390/pr10112198

License: Creative Commons Attribution 4.0 International (CC BY 4.0)

processes

MDPI

Article

Investigation on the Injection Pattern of Intermittent Natural Gas Flooding in Ultra-Low Permeability Reservoirs

Lifei Dong [1,2,3,*], Linxiang Li [4], Wenzhuo Dong [3], Miao Wang [3] and Xiaozhi Chen [4]

1 State Key Laboratory of Shale Oil and Gas Enrichment Mechanisms and Effective Development, Beijing 102206, China
2 Research and Development Center for the Sustainable Development of Continental Sandstone Mature Oilfield by National Energy Administration, Beijing 102206, China
3 Faculty of Civil Engineering, Chongqing Three Gorges University, Chongqing 404120, China
4 Gudong Oil Production Plant of Shengli Oilfield, SINOPEC, Dongying 257237, China
* Correspondence: lfdong2012@sina.com

Abstract: Natural gas is a viable oil displacement agent in ultra-low-permeability reservoirs due to its good fluidity. It can also cause gas channeling during continuous injection, which limits its oilfield application. In order to relieve gas channeling during natural gas flooding, the injection mode should be changed. The use of intermittent natural gas injection (IGI) after the continuous natural gas injection in an ultra-low-permeability reservoir is proposed, and optimization of the injection parameters is discussed. The results show that IGI can be divided into three stages, the gas injection stage, the well shutting stage and the oil production stage. With the increase in injection time, the oil recovery enhances obviously as a result of IGI because the gas fingering can be controlled at the well shutting stage, and the gas/liquid ratio grows slowly because the gas breakthrough can be reduced at the oil production stage. The oil recovery improves with the increase in cycle time of IGI, while the increase rate reduces evidently after the cycle time reaches 360 min. The oil recovery increment is low if the cycle index exceeds 3 in the ultra-low-permeability reservoir. Thus, the optimal cycle time for each round and the appropriate cycle index of IGI are 360 min and three rounds.

Keywords: enhanced oil recovery; intermittent natural gas injection; ultra-low-permeability reservoir; cycle time; cycle index

check for updates

Citation: Dong, L.; Li, L.; Dong, W.; Wang, M.; Chen, X. Investigation on the Injection Pattern of Intermittent Natural Gas Flooding in Ultra-Low Permeability Reservoirs. *Processes* **2022**, *10*, 2198. https://doi.org/10.3390/pr10112198

Academic Editor: Blaž Likozar

Received: 22 July 2022
Accepted: 30 September 2022
Published: 26 October 2022

Publisher's Note: MDPI stays neutral with regard to jurisdictional claims in published maps and institutional affiliations.

Copyright: © 2022 by the authors. Licensee MDPI, Basel, Switzerland. This article is an open access article distributed under the terms and conditions of the Creative Commons Attribution (CC BY) license (https://creativecommons.org/licenses/by/4.0/).

1. Introduction

Oil development efficiency in ultra-low-permeability sandstone reservoirs is typically inadequate due to poor physical properties, such as the strong water sensitivity, intense micro heterogeneity and ultra-low permeability [1–3]. Low oil recovery ratio and high water cut are always evident during water flooding. Thus, with the acceleration of the exploration and development of ultra-low-permeability oil reservoirs, an increasing number of enhanced oil recovery technologies, such as profile control and asphaltene control, are required [4–6].

As an oil displacement agent, natural gas has many advantages compared with water. (i) The viscosity of natural gas is low. This makes the natural gas enter the small pore throat in the reservoir easily [7–11]. (ii) Natural gas can be dissolved into the oil and reduce the oil viscosity [12–14], which is beneficial for oil displacement [9]. (iii) Natural gas can be achieved at the gas reservoir, which is very convenient.

Based on the advantages mentioned above, natural gas flooding is usually considered as a major technology of enhanced oil recovery (EOR) in reservoirs, especially for the ultra-low-permeability sandstone oil reservoir. Natural gas injection has been introduced to improve oil displacement efficiency for petroleum engineers due to its property of high microscopic sweep efficiency [15–19]. However, the swept volume, controlled by the mobility ratio between the displacement agency and the oil, is unsatisfactory during natural

gas injection because of its low viscosity. Gas fingering is easily formed during natural gas flooding, and the subsequent injection gas flows directly into the production well and fails to displace the oil. This limits the method's application in EOR to a great extent. In order to improve the application of gas flooding, gas fingering should be controlled. Thus, the profile control is commonly of concern.

Intermittent gas injection (IGI) and water-alternating gas injection (WAGI) are two main profile control methods currently used in gas flooding in the oilfield [20–23]. However, some studies suggest that the gas mobility control ability of IGI is better than that of water-alternating gas injection (WAGI) [24–26]. IGI has superior sweep efficiency, gas/oil ratio (GOR) stabilization and oil production.

Generally, each cycle of IGI is composed of three stages: the gas injection stage, the well shutting stage and the oil production stage. At the gas injection stage, the pressure of the reservoir increases, which is beneficial for forming an effective oil displacement pressure system. At the stage of well shutting, the natural gas has enough time to be expanded into the small pore throat and to be dissolved into the oil there. This reduces the viscosity of oil and improves its fluidity [27]. At the stage of oil production, the pressure declines rapidly because of the open output, and the reservoir has no supplementation. After these three stages, the cycle of IGI begins.

However, there is no discussion on the applicability of IGI in ultra-low-permeability reservoirs, and the technical parameters applied in the ultra-low-permeability reservoir are unknown. Experimental proof, which can provide a reference for field application, is especially inadequate.

To fill this gap, a natural gas flooding experiment was performed. First, continuous natural gas injection is simulated and was stopped when the oil could not be displaced further. Then, IGI with different cycle times and cycle indexes was performed. Finally, the optimized technical parameters of IGI were obtained by comparing on the oil recovery improvement. We hope this work can benefit the application of IGI technology.

2. Experiment

2.1. Experimental Devices and Materials

The main experimental devices are shown in Figure 1, including a high-pressure constant flow pump, a calorstat, several piston containers, several precise pressure sensors, several pressure valves, a core holder, a set of oil-water separating and measuring instrument, a computer and a gas measurer [28]. Some experimental apparatus are shown in Figure 2.

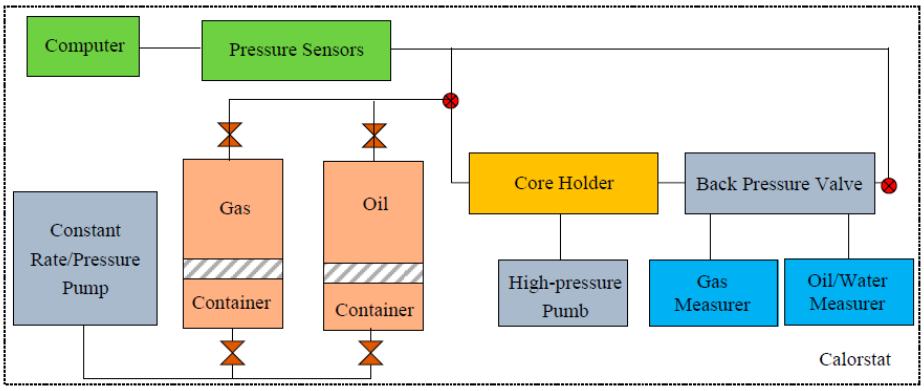

Figure 1. Experimental devices and their connection.

(a) (b) (c)

Figure 2. Experimental apparatus. (**a**) Pump, (**b**) container and core holder, (**c**) calorstat.

The injection rate can be controlled by the pump with the range of 0.001 to 60 mL/min. The back pressure valve is opened only when the outlet pressure exceeds the back pressure, which represents the minimum outflow pressure. The pressure sensors are set both at the beginning and the end of the core holder to test the inlet pressure and outlet pressure, respectively.

The crude oil used in the experiments was collected from Fuyu oilfield, which has considerable water channeling. It is necessary to perform gas flooding to enhance oil recovery. The viscosity of the oil is 2.04 mPa·s at the temperature of 50 °C. The oil displacement agent is natural gas, and its main components are listed in Table 1.

Table 1. Main components of natural gas.

Component	Concentration/%	Component	Concentration/%
Methane	94.08	n-Butane	0.168
Ethane	1.10	CO_2	0.532
Propane	0.326	N_2	2.81

The experimental core is a man-made core, which has the same basic physical properties as the reservoir in Fuyu oilfield. The porosity is 8.4% and the permeability is 6.88×10^{-3} μm^2.

All the oil displacement experiments were carried out under the conditions of 50 °C reservoir temperature and 10 MPa formation pressure. The protocol used to perform the experiments is GB/T 28912-2012 (Test method for two phase relative permeability in rock).

2.2. Experimental Processes

Before the oil displacement experiment, the air in the experimental cores should be vacuumized, and bound water with salinity of 4600 mg/L should be formed. The pore throat must be saturated with the experimental oil for more than 12 h. Then, natural gas flooding is performed.

The continuous natural gas flooding stops when the oil cannot be displaced further. After that, IGI is performed. In order to maximize the oil recovery ratio by IGI after continuous natural gas flood in the ultra-low-permeability reservoir, the optimized cycle time and the cycle index of IGI are discussed.

During the process of IGI, the injection pressure was kept at 12 MPa, and the back pressure was 10 MPa. In each period of IGI, the pause follows after the gas injection stage and then the oil production stage begins. At the oil production stage, the injection entrance should be closed. The cycle times of IGI, including the oil production time and pause time, were set to 90, 180, 360 and 1440 min. The cycle index ranged from 1 to 11 cycles. The injection rate of natural gas during the experiments was 0.3 mL/min, equal to 0.88 m/d. The experimental scheme is shown in Table 2.

Table 2. Experimental schemes of IGI.

Number	Permeability /10^{-3} μm^2	Porosity /%	Cycle Time/min			Cycle Index
			Injection Stage	Pause Stage	Total	
JX-1	6.88	8.75	60	30	90	11
JX-2		8.33	120	60	180	11
JX-3		8.09	240	120	360	11
JX-4		8.39	1080	360	1440	11

3. Experimental Results and Analysis

3.1. Analysis of EOR of IGI

The oil production dynamics of different schemes with different cycle times are shown in Figure 3.

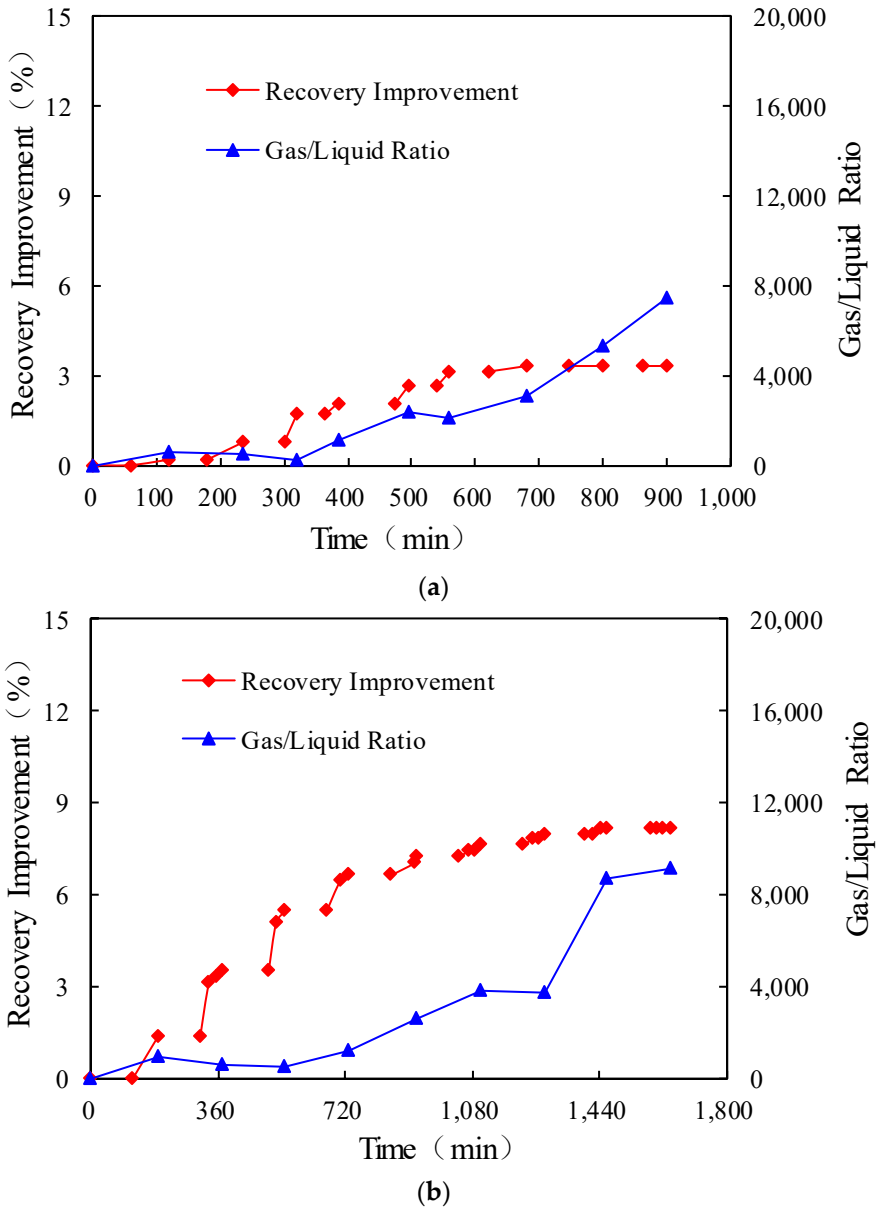

Figure 3. *Cont.*

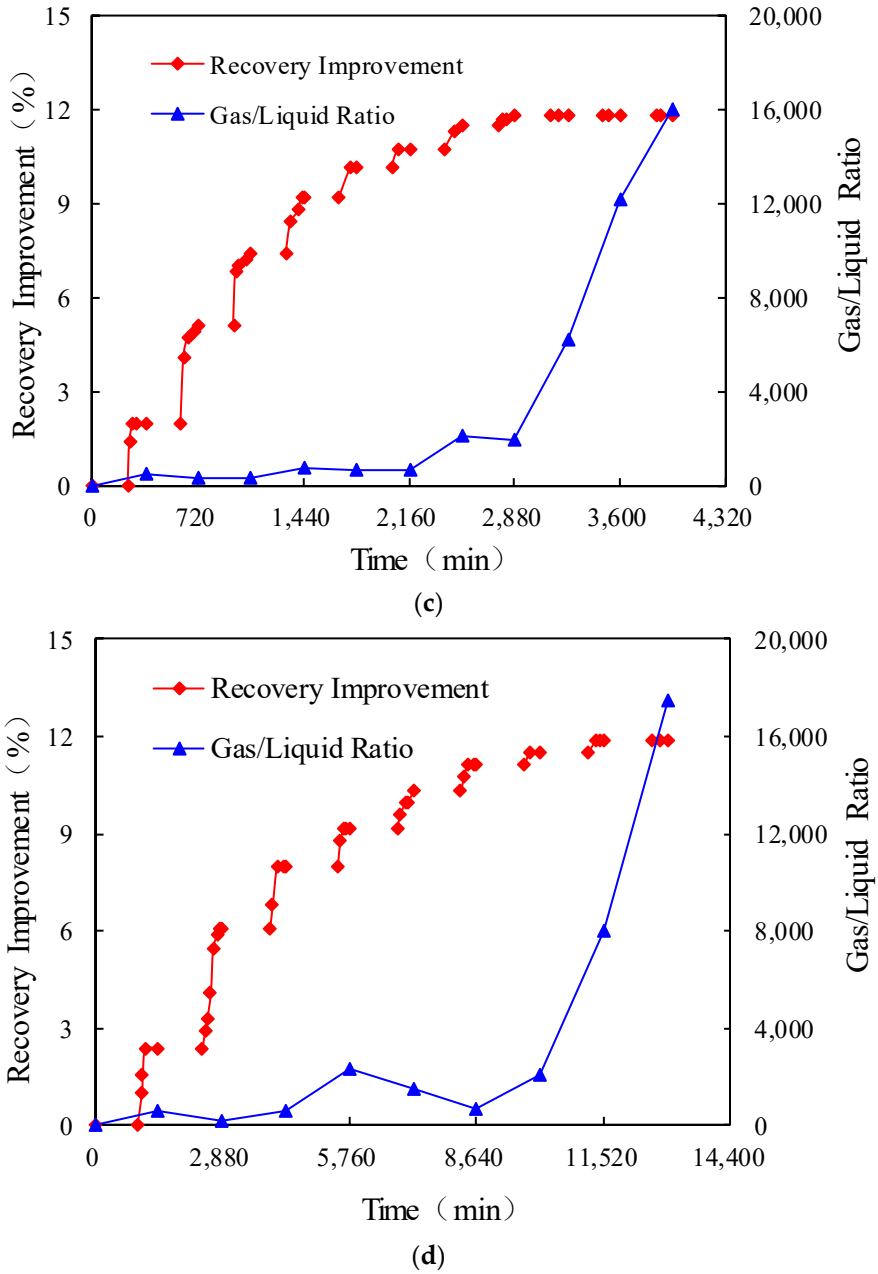

Figure 3. Production dynamics of different schemes for IGI. (**a**) Scheme JX-1. (**b**) Scheme JX-2. (**c**) Scheme JX-3. (**d**) Scheme JX-4.

The experimental results show that the oil recovery can be improved obviously by IGI after continuous natural gas flooding. Meanwhile, the gas channeling can be reduced by IGI because the gas/liquid ratio after gas breakthrough grows slowly at the initial oil production stage.

As outlined in the literature review, gas channeling or gas fingering can be easily caused by the continuous natural gas flooding. This makes the injected gas to flow into the producing well directly, which means the gas has insufficient time to make contact with or displace the oil there. Thus, the oil recovery is reduced. The pause stage of IGI can provide the redistribution time of gas and oil in the porous media, which can reduce the gas fingering obviously. After that, the gas flooding stage of IGI can displace the oil further. The longer the pause stage, the more sufficiently the gas and oil are redistributed. This is why IGI can control the gas channeling and improve the oil recovery.

3.2. Optimization of IGI Parameters

As seen from the analysis above, IGI has the advantages of controlling gas fingering and enhancing oil recovery. However, in practical application, the ultimate aim is to maximize benefits. Thus, a further experiment was carried out to determine the optimal technical parameters of IGI to maximize the degree of controlling gas fingering and enhancing oil recovery. An effective approach is to optimize the IGI patterns. Thus, the cycle time and the cycle index of IGI were investigated via laboratory experiments in this study.

3.2.1. The Cycle Time of IGI

As can be seen from the Scheme JX-1 to Scheme JX-4 in Figure 4, the oil recovery improves with the increase in cycle time, and the increment changes little after the cycle time reaches 360 min. This is because the natural gas needs enough time to disperse in the pore throat and to enhance the micro-swept volume. If the cycle time is insufficient, the effect of IGI mentioned above stops. Thus, the cycle time of IGI, especially for the time at the pause stage, should be long enough to accommodate the process. According to the experimental results, the suitable cycle time of IGI after the continuous natural gas flooding in the ultra-low-permeability reservoir is 360 min.

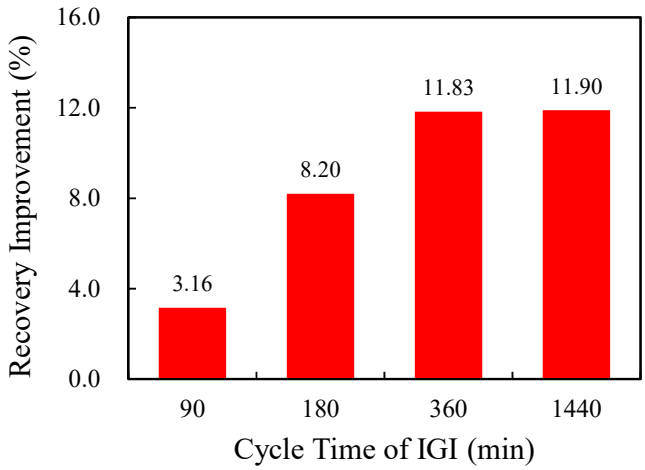

Figure 4. Oil recovery improvement for different cycle times.

3.2.2. The Cycle Index of IGI

The cycle index of IGI also affects the final oil recovery. It can be seen from Figure 5 that the oil recovery varies with the IGI cycle.

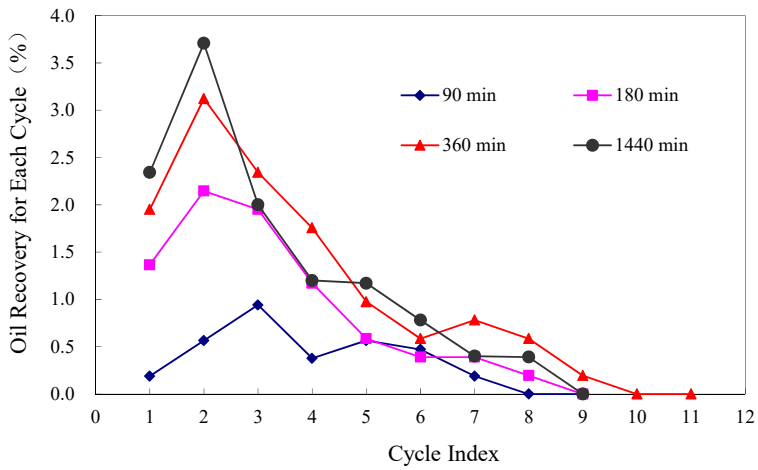

Figure 5. Oil recovery for each cycle of IGI.

As the stress sensitivity is not considered during the experiments, the permeability and porosity of cores from cycle 1 to cycle 11 are constant.

From each cycle time curve, it can be seen that the oil recovery improves obviously in the initial three cycles, but it changes little after five cycles. This is because there is an abundance of residual oil after continuous natural gas flooding, and it is displaced easily in the previous cycles of IGI. With the increase in cycle index of IGI, the remaining oil reduces, and there is little left after five cycles. Meanwhile, the higher the cycle time, the more obvious the oil recovery improves in the first three cycles, and the more apparently the curve declines after three cycles.

4. Conclusions

In this work, experiments were carried out to simulate the intermittent natural gas injection (IGI) after continuous natural gas flooding. The applicability of IGI in an ultra-low-permeability reservoir was evaluated, and the optimized technical parameters of IGI, the cycle time and the cycle index, were determined by comparing the oil recovery improvement of different experiments. This work can provide experimental proof and technical parameters for field application, which are lacking in existing studies. The specific conclusions are shown as follows.

1. Intermittent natural gas injection (IGI) has the advantage of controlling gas fingering compared with continuous natural gas flooding. It can enhance oil recovery because IGI can reduce the gas mobility and improve the swept volume effectively.
2. The oil recovery is influenced by the cycle time of IGI. It improves obviously with the increase in cycle time and changes little when the cycle time reaches 360 min in the ultra-low-permeability reservoir.
3. The oil recovery of IGI improves with the increase in the cycle index. The increment of oil recovery is obvious in the initial three cycles, while it changes little after five cycles in the ultra-low-permeability reservoir.

Author Contributions: Conceptualization, methodology and, L.D.; investigation, L.L.; project administration, L.D.; data curation, M.W.; writing—original draft preparation, W.D.; writing—review and editing, X.C. All authors have read and agreed to the published version of the manuscript.

Funding: This research was funded by (1) the project of science and technology research program of Chongqing Education Commission of China (KJQN202001203; KJZD-K202201204); (2) the Open Fund of Sichuan Oil and Gas Development Research Center (SKB21-08); (3) the Open Fund of Sustainable Development Research Center of Three Gorges Reservoir Area (2021sxxyjd03). (4) the Natural Science Foundation of Chongqing, China (2022NSCQ-MSX3909).

Data Availability Statement: Not applicable.

Acknowledgments: Funding from "Chongqing Education Commission", "Sichuan Oil and Gas Development Research Center", "Sustainable Development Research Center of Three Gorges Reservoir Area" and " Chongqing Bureau of Science and Technology" are gratefully acknowledged.

Conflicts of Interest: The authors declare no conflict of interest.

Nomenclature

IGI	intermittent natural gas injection
EOR	enhanced oil recovery
GOR	gas/oil ratio
WAGI	water-alternating gas injection

References

1. Tang, Y.; Chen, Y.; He, Y.; Yu, G.; Guo, X.; Yang, Q.; Wang, Y. An improved system for evaluating the adaptability of natural gas flooding in enhancing oil recovery considering the miscible ability. *Energy* **2021**, *236*, 121441. [CrossRef]
2. Tu, X. Comparative Analysis of CO2 Miscible Flooding and Conventional Natural Gas Flooding. *Contemp. Chem. Ind.* **2020**, *49*, 956–960.
3. Yue, X.A.; Wang, F.Y.; Wang, K.L. *Enhanced Oil Recovery Foundation*, 1st ed.; Petroleum Industry Press: Beijing, China, 2007.
4. Khormali, A.; Moghadasi, R.; Kazemzadeh, Y.; Struchkov, I. Development of a new chemical solvent package for increasing the asphaltene removal performance under static and dynamic conditions. *J. Pet. Sci. Eng.* **2021**, *206*, 109066. [CrossRef]
5. Khormali, A.; Sharifov, A.R.; Torba, D.I. Experimental and modeling analysis of asphaltene precipitation in the near wellbore region of oil wells. *Pet. Sci. Technol.* **2018**, *36*, 1030–1036. [CrossRef]
6. Nelson, P.H. Pore-throat sizes in sandstones, tight sandstones, and shales. *AAPG Bull.* **2009**, *93*, 329–340. [CrossRef]
7. Zheng, T.; Liu, X.; Yang, Z.; Luo, Y.; Zhang, Y.; Xiao, Q.; He, Y.; Zhao, X. Identification of seepage mechanisms for natural gas Huff-n-Puff and flooding processes in hydrophilic reservoirs with low and ultra-low permeabilities. *J. Energy Resour. Technol.* **2021**, *143*, 063004. [CrossRef]
8. Ding, M.; Wang, Y.; Yue, X.-A.; Chen, W.; Shi, S. The effects of initial gas content of the oil on recovery by natural gas flood. *Pet. Sci. Technol.* **2015**, *33*, 1454–1462. [CrossRef]
9. Ding, M.; Wang, Y.; Liu, D.; Wang, W.; Chen, W. Mutual interactions of CO_2/oil and natural gas/oil systems and their effects on the EOR process. *Pet. Sci. Technol.* **2015**, *33*, 1890–1900. [CrossRef]
10. Yuliang, S.; Chunxin, W.; Li, G.; Xiaodong, W. Determination of waterflooding limits for driving an ultra-Low permeability reservoir. *Pet. Drill. Tech.* **2012**, *40*, 82–86.
11. Wei, H.; Yue, X.; Zhao, Y.; Li, L.; Jia, D. The injection pattern of immiscible nitrogen displacement after water flooding in an ultra-low permeability reservoir. *Pet. Sci. Technol.* **2013**, *31*, 2304–2310. [CrossRef]
12. Lifei, D.; Miao, W.; Wei, W.; Hun, L. Investigation of natural gas flooding and its channelling prevention as enhanced oil recovery method. *Geosystem Eng.* **2021**, *24*, 137–144. [CrossRef]
13. Fu, H.T.; Wang, S.D. Research status of gas flooding. *Energy Chem. Ind.* **2015**, *36*, 44–48.
14. Sheng, J.J. Enhanced oil recovery in shale reservoirs by gas injection. *J. Nat. Gas Sci. Eng.* **2015**, *22*, 252–259. [CrossRef]
15. Tang, L. Analysis on influencing factors of natural gas flooding in low permeability reservoir. *World Pet. Ind.* **2021**, *28*, 60–64.
16. Haoguang, W.E.I.; Xiang, Y. An experimental investigation of the natural gas immiscible displacement in ultra-low permeability reservoirs. *Acta Pet. Sin.* **2011**, *32*, 307–310.
17. Zhang, Y.Y.; Cui, H.X.; Han, H.J.; Han, B.; Li, H.J. Study on numerical simulation of enhancing oil recovery using natural gas in the low-permeability oil reservoirs. *Pet. Geol. Recovery Effic.* **2005**, *12*, 61–63.
18. Guo, Y.; Yang, S.; Li, L.; Wang, G.; Zhao, W. Experiment on physical modeling of displacement oil with natural gas for long core. *FaultBlock Oil Gas Field* **2009**, *16*, 76–78.
19. Haines, H.K.; Monger, T.G. A laboratory study of natural gas huff-n-puff. In *CIM/SPE International Technical Meeting*; OnePetro: Richardson, TX, USA, 1990; ISBN 978-1-55563-480-3.
20. Phukan, R.; Gogoi, S.B.; Tiwari, P. Enhanced oil recovery by alkaline-surfactant- alternated-gas/CO_2 flooding. *J. Pet. Explor. Prod. Technol.* **2019**, *9*, 247–260. [CrossRef]
21. Bayat, M.; Lashkarbolooki, M.; Hezave, A.Z.; Ayatollahi, S. Investigation of gas injection flooding performance as enhanced oil recovery method. *J. Nat. Gas Sci. Eng.* **2016**, *29*, 37–45. [CrossRef]
22. Heidari, P.; Alizadeh, N.; Kharrat, R.; Hossein Ghazanfari, M.; Laki, A.S. Experimental analysis of secondary gas injection strategies. *Pet. Sci. Technol.* **2013**, *31*, 797–802. [CrossRef]
23. Wan, T.; Sheng, J.J. Evaluation of the EOR potential in hydraulically fractured shale oil reservoirs by cyclic gas injection. *Pet. Sci. Technol.* **2015**, *33*, 812–818. [CrossRef]
24. Ahmadi, Y.; Hasanbaygi, M.; Kharrat, R. A comparison of natural depletion and different scenarios of injection in the reservoir from the beginning of oil production. *Pet. Sci. Technol.* **2014**, *32*, 2559–2565. [CrossRef]
25. Kulkarni, M.M.; Rao, D.N. Experimental investigation of miscible and immiscible water-alternating-gas (WAG) process performance. *J. Pet. Sci. Eng.* **2005**, *48*, 1−20. [CrossRef]
26. Farsetti, S.; Farisè, S.; Poesio, P. Experimental investigation of high viscosity oil–air intermittent flow. *Exp. Therm. Fluid Sci.* **2014**, *57*, 285–292. [CrossRef]
27. Li, Y.Q. Enhanced oil recovery and application review by gas injection in low permeability oil reservoirs. *Tuha Oil Gas* **2004**, *9*, 112–116.
28. Nguyen, T.A.; Ali, S.M. Effect of nitrogen on the solubility and diffusivity of carbon dioxide into oil and oil recovery by the immiscible WAG process. *J. Can. Pet. Technol.* **1998**, *37*, 24–31. [CrossRef]